Model Number R60Q

Quad Air Pressure Booster System • Installation and Operating Instructions

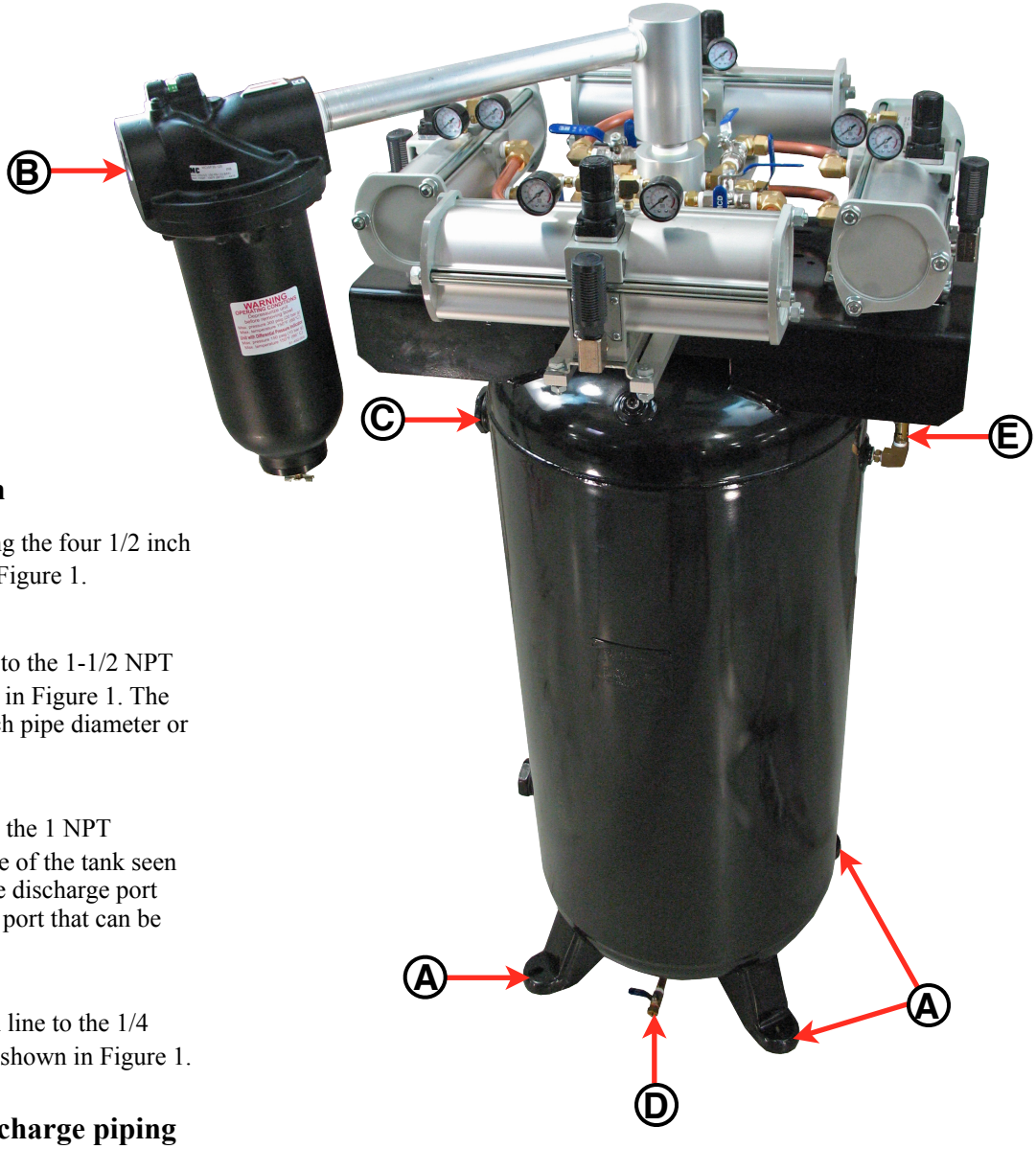

Figure 1

Installation

1 Bolt the tank to the floor using the four 1/2 inch diameter mounting holes (A) in Figure 1.

2 Connect the drive air supply to the 1-1/2 NPT port (B) on the inlet filter shown in Figure 1. The air supply piping should be 1 inch pipe diameter or larger.

3 Connect the discharge line to the 1 NPT discharge port (C) on the left side of the tank seen in Figure 1. There is a alternative discharge port that is plugged below the 1 NPT port that can be used also.

4 Attach your condensate drain line to the 1/4 NPT port (D) on the drain valve shown in Figure 1.

Make sure that your discharge piping components are rated for 200 psi.

MPS MIDWEST PRESSURE SYSTEMS

Midwest Pressure Systems, Inc.
850 Transport Drive, Valparaiso, IN 46383
Phone 219-462-0070

www.midwestpressuresystems.com

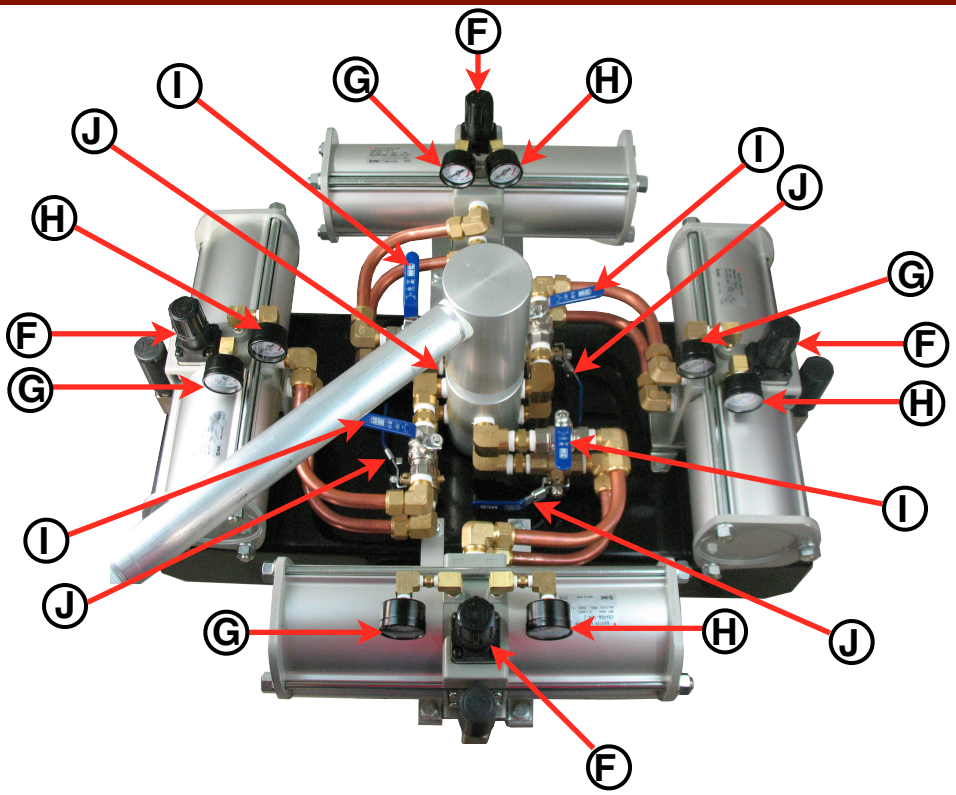

Figure 2

Startup

1 There is a discharge pressure regulator for each booster (F). Pull up on the black knob on the top of the booster to unlock it. Turn the knob clockwise for a higher discharge pressure and counterclockwise for a lower pressure. When multiple boosters are operating, set the regulators for each booster to the same discharge pressure. The regulators are self relieving so if one is set for a higher pressure, the other regulators will try to vent the pressure.

2 The pressure gauges in Figure 2 labeled (G) indicate inlet pressure and the gauges in Figure 2 labeled (H) indicate discharge pressure. For initial system start up set all of discharge pressure regulators on the boosters to zero by turning the regulator knobs all the way counterclockwise.

3 Supply air to the system and slowly increase the regulator settings until the desired discharge pressure is reached. When the boosters have pressurized the tank to the maximum desired pressure, they will stop cycling (this is called the "stalled" condition"). If one of the regulators vents at the stall condition, turn the knob clockwise until the venting stops.

4 The maximum recommended discharge pressure is 190 psi. The safety relief valve (E), labeled in Figure 1, is set for 200 psi. If the supply pressure is higher than 95 psi, it is possible to set the regulators so the system exceeds the maximum discharge pressure of 190 psi.

Operation

1 This system can be operated with one, two, three, or four boosters running at once. To operate with all four boosters, open all four inlet (I) and discharge valves (J) labeled in Figure 2 above. To operate with one, two, or three boosters, only open the inlet valve (I) and discharge valve (J) corresponding to those boosters, and close the inlet (I) and discharge (J) valves of the desired idle booster(s).

2 The system is fully automatic. When the desired discharge pressure has been reached, and no flow is required, the boosters will stop automatically. They will restart when the pressure drops about 5 psi.

Maintenance

The R60Q booster system was designed with ease of maintenance in mind. When a booster requires maintenance the booster can be removed. Steps 1 thru 4 below show how to remove a booster safely from the system for maintenance while the other boosters continue to operate.

STEP 1:
Close the air inlet valve (I), seen in Figure 2, for the booster(s) to be removed. This will shutoff the air supply to the booster(s). Close the discharge safety vent valve (J), seen in Figure 2, for the booster(s) being removed. This will vent the air pressure remaining inside the booster. There will be a loud hissing sound for a few seconds while the discharge valve vents air from inside the booster. Make sure that both inlet and discharge pressure gauges on the booster(s) being removed read zero psi.

STEP 2:
Use a 1" open end wrench or crescent wrench to loosen the tube fittings labeled in Figure 3 on the next page. If you are removing either of the two boosters directly mounted on the 60 gallon tanks use a pair of 1/2" wrenches to loosen and remove the hardware used to secure the booster(s). If you are removing either of the two boosters mounted on the railing system that extends from the top of the 60 gallon tank, use a pair of 11/16" wrenches to loosen and remove the hardware, shown in Figure 4.

STEP 3:
The booster(s) can now be removed from the system by gently pulling the booster and copper tubing assembly free from the tube connections, shown in Figure 5. **It is important to keep contaminants from entering the booster system and tubing**. Tape or plug to cover the exposed connections (pointed to in Figure 5) after the booster(s) are removed from the system.

STEP 4:
Once maintenance of the booster(s) has been performed, reinstall the booster(s). Then refer to the Startup section in this manual.

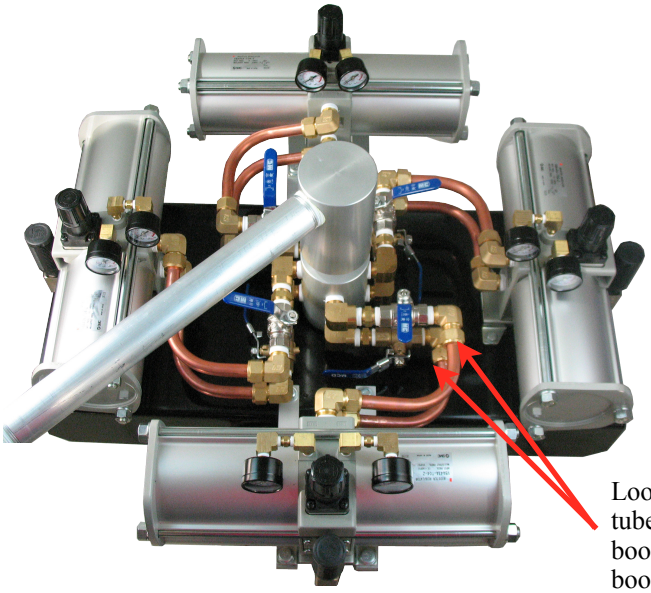

Loosen the corresponding tube fittings for each booster to remove booster(s) from the system

Figure 3

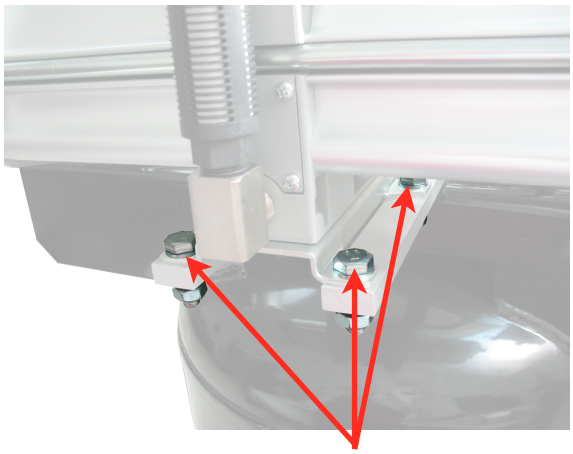

Remove this hardware to remove booster from the system. (The fourth bolt is not pictured.)

Figure 4

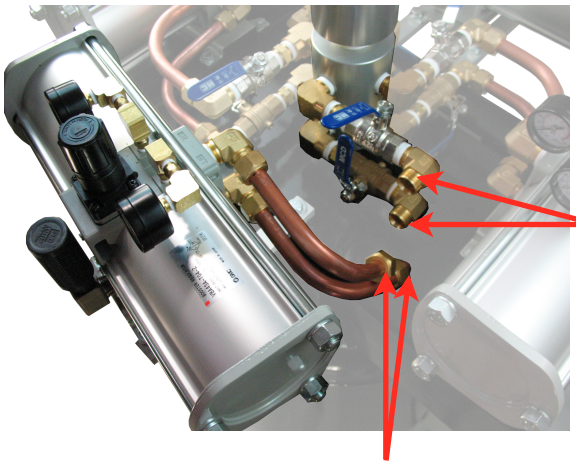

Plug or tape these ports

Plug or tape these ports

Figure 5

Model Number R60Q

Bootstrap Compressor • Operation and Warranty

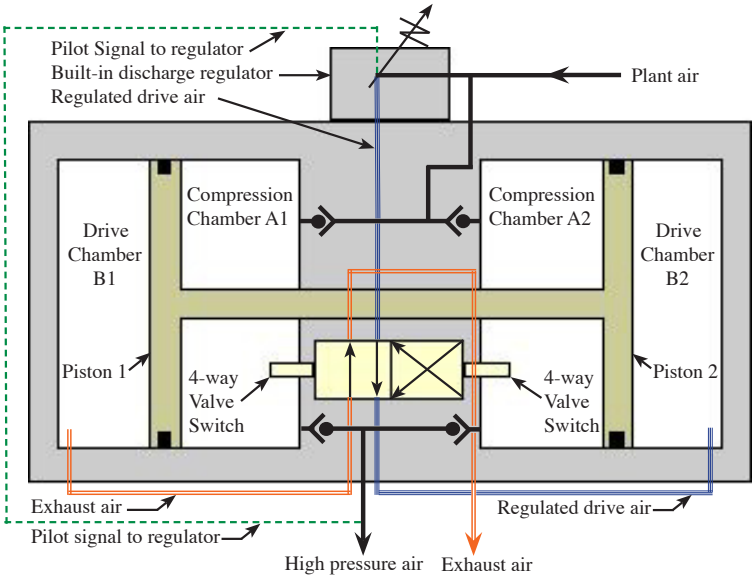

General Concerns

Please refer to the operating description on the right, and the schematic above to gain an understanding of the design principles and mechanical function of the R60Q Model Booster System. The moving parts of each Bootstrap Compressor are permanently lubricated with a multipurpose grease (except for the check valves). Operation with a lubricator upstream voids the warranty. If a lubricator is required, it should be installed on the downstream (discharge) side. A well-maintained 5 micron inlet air filter is required to maintain the warranty by ensuring that no dust particles enter the units and foul the seals, or cause premature wear of the highly-polished seal surfaces. The wear parts in the boosters consist of check valves, springs and dynamic seals. These parts are designed for 1800 miles of piston travel. The four-way valve, which controls movement of the pistons, is a lapped, stainless steel valve with no elastomeric seals subject to wear. Under normal conditions, this valve will provide many years of operation. The discharge regulator built into the center of the unit sees very little wear, and is designed to provide many years of service under normal conditions. The wear parts are typically replaced 2 to 3 times before a valve or regulator kit is required.

#KRW • Wear parts kit
#KRV • Valve kit
#KRR • Regulator kit

Operating Description

The plant air stream always fills Compression Chambers A1 and A2 directly, through a set of check valves. These two chambers are always pressurized to the maximum initial air pressure available (the R60Q Model Booster System is not designed for inlet air pressures higher than 150 psig). A branch of the plant air stream flows through a pilot-activated regulator, which reduces the pressure to the level required to attain the desired Bootstrap Compressor discharge pressure (the discharge pressure is set manually by adjusting the regulator handle). This regulated air stream flows through a four-way valve which directs it to Drive Chamber B2. At the same time, the four-way valve opens Drive Chamber B1 to exhaust. The pressure force exerted on the interconnected pistons by the pressures in Drive Chamber B2 and Compression Chamber A1, is sufficient to compress the air in Chamber A2 to a higher pressure (the maximum discharge pressure attainable is two times the plant air pressure). At the end of its travel, Piston 2 switches the four way valve, which opens Drive Chamber B2 to exhaust, and pressurizes Drive Chamber B1 with regulated drive air, thus reversing the direction of the interconnected pistons, until Piston 1 switches the valve back to its original position. The interconnected pistons shuttle back and forth continuously, producing a high pressure air stream, determined by the discharge pressure set on the built-in regulator. The R60Q Model is designed to operate at a maximum discharge pressure of 190 psig. Higher discharge pressures, though possible, can result in catastrophic failure of the booster system.

WARRANTY

Midwest Pressure Systems, Inc. warrants the R60Q Model Booster System to be free of defects in material and workmanship for a period of one year after purchase, except piston seals, rod seals, and check valves which are warranted for six months after purchase. We will either repair or replace a failed unit returned by the customer. No other warranty is expressed or implied. Proof of the purchase date is required. This warranty does not apply to equipment which has been abused, and is voided by use of a lubricator, or failure to use a well-maintained inlet filter. Customer must obtain a return authorization number before shipping the unit to the factory.

MPS
MIDWEST PRESSURE SYSTEMS

Midwest Pressure Systems, Inc.
850 Transport Drive, Valparaiso, IN 46383
Phone 219-462-0070

www.midwestpressuresystems.com