Installation and Operating Instructions • Model S4020N5

1 Mount the Model S4020N5 Pressure Booster System on a horizontal surface. The booster vibrates while operating, so use the 1/2" diameter mounting holes, shown in the diagram on the right, to bolt it to a solid surface. (The booster can be mounted vertically if desired).

2 Connect your shop air line to the 1/2" FNPT inlet air filter on the front of the booster system. A shutoff valve can be installed upstream of the filter for convenient removal of the system for maintenance. The booster system includes a drive air pressure regulator. The booster is permanently lubricated. **Use of an inlet lubricator will void the warranty. The maximum inlet pressure is 150 psig.**

3 Connect your nitrogen gas line to the 1/2" FNPT inlet port on the front of the booster. Supply piping should have an inside diameter of 1/4" or greater.

4 Attach your discharge line to the 1/2" FNPT port on the front of the tank. **If the application requires a lubricator, install the lubricator downstream of the booster.** A filter should be attached downstream of the tank to prevent scale or rust in the tank from damaging components attached to the booster system.

5 The bottom of the accumulator tank has a 1/4" ball valve to drain condensate. A drain line or automatic drain valve can be attached to this valve when needed. Close the valve before starting the booster.

6 The drive air pressure regulator is set by the black, snap-lock knob. Pull down on the knob to unlock it. Adjust the knob by turning it clockwise for a higher drive air pressure or counterclockwise for lower pressure. Drive air pressure is read on the gauge attached to the regulator. The gauge mounted on the tank indicates nitrogen discharge pressure. **The booster system will attain a maximum pressure equal to the sum of 4 times the drive air pressure, plus the nitrogen supply pressure.** For example, if the nitrogen supply pressure is 75 psi, and the drive air pressure setting is 50 psi, the maximum discharge pressure will be (4(50)+75)=275 psi. If the shop air supply pressure is greater than 120 psi, it is possible to exceed the 600 psi maximum allowable discharge pressure of the system. Reduce the regulated drive pressure so the discharge pressure is no higher than 590 psi. The optimum setting is for the booster to receive the maximum available of unregulated nitrogen supply pressure and the minimum regulated drive air pressure to reach the desired discharge pressure. Supply shop air to the booster, open the shutoff valve, and it will start to operate. Set the drive air regulator to attain the desired discharge pressure, and push down on the regulator knob until it "clicks" to lock the regulator on that setting.

Mounting Bolt Pattern:

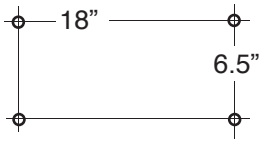

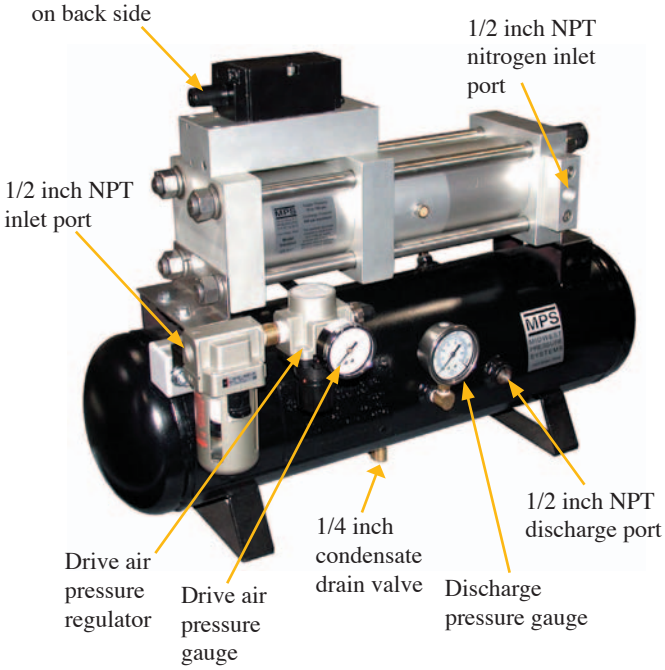

7 For more precise pressure control, set the drive air regulator for a higher discharge pressure than required, and install a filter and secondary regulator on the discharge line of the accumulator. This allows for greater accumulator storage capacity, and minimizes pressure fluctuations downstream of the system. Make sure that any downstream components are rated for the accumulator pressure, or are protected by a relief valve in case the secondary regulator fails.

8 The Model S4020N5 Pressure Booster System will operate as long as there is demand for high pressure nitrogen. When there is no demand, the booster will "stall" at the pressure set by the discharge regulator. The stalled condition consumes no energy and does not damage the booster. The booster will start up automatically when the pressure falls slightly as a result of demand for high pressure nitrogen.

9 The accumulator is rated for 625 psig and includes a relief valve set for 600 psig.At pressures above 590 psi, the relief valve can leak or open. **With shop air pressure above 120 psi, the drive air regulator can be set to exceed 600 psi which will cause the relief valve to open and make a loud noise. Use care when setting the drive air pressure regulator not to exceed the maximum system pressure of 600 psi.**

MPS
MIDWEST PRESSURE SYSTEMS

Midwest Pressure Systems, Inc.
204 Easy Street
Carol Stream, IL 60188

Phone 630-933-9037
Fax 630-933-9040
www.midwestpressuresystems.com

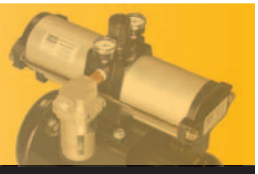

Operation & Warranty • Model S4020N5

DOUBLE-ACTING BOOSTER SCHEMATIC

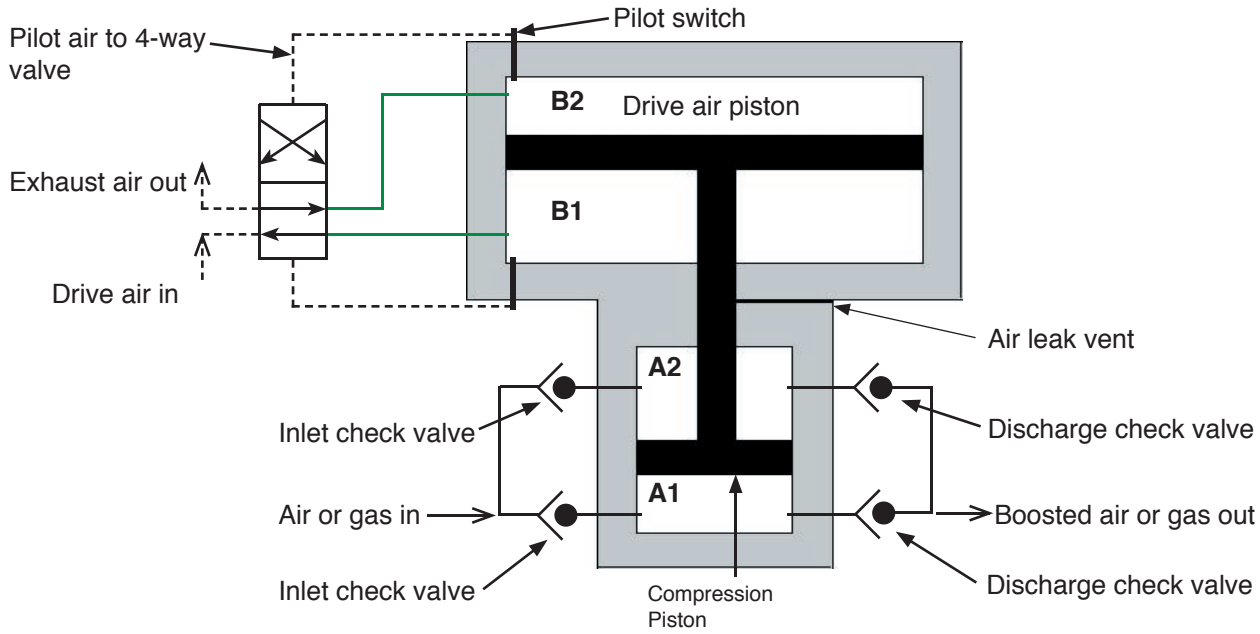

General Concerns

Please refer to the operating description on the right, and the schematic above to gain an understanding of the design principles and mechanical function of the S4020N5 Pressure Booster System. The dynamic seals in the booster are made from filled-Teflon and require no lubrication. Operation with a lubricator upstream voids the warranty. If a lubricator is required, it should be installed on the downstream (discharge) side. A well-maintained 5 micron inlet air filter is required to maintain the warranty by ensuring that no dust particles enter the unit and foul the seals, or cause premature wear of the highly-polished seal surfaces. The seals in the booster are designed for 10 million cycles before requiring replacement. Replacement parts kits for these seals are available. If you have problems with the booster, call Midwest Pressure System and give us the serial number of the unit. Always obtain a return authorization number before shipping a unit to Midwest Pressure Systems, Inc. for repair or warranty service.

Model K4020AAV48 • Repair Kit

Operating Description

The plant air stream always fills Compression Chambers A1 and A2 directly, through a set of check valves. These two chambers are always pressurized to the maximum initial air pressure available (the Model S4020N5 Pressure Booster System is not designed for inlet air pressures higher than 150 psig). The drive air stream flows through a regulator, which reduces the pressure to the level required to attain the desired Pressure Booster discharge pressure (the discharge pressure is set manually by adjusting the regulator handle). This regulated air stream flows through a four-way valve which directs it to Drive Chamber B2. At the same time, the four-way valve opens Drive Chamber B1 to exhaust. The pressure force exerted on the interconnected pistons by the pressures in Drive Chamber B2 and Compression Chamber A2, is sufficient to compress the air in Chamber A1 to a higher pressure (the maximum discharge pressure attainable is four times the regulated drive air pressure plus the plant air pressure supplied the compression piston). At the end of its travel, the bottom of the Drive Air Piston switches the four way valve, which opens Drive Chamber B2 to exhaust, and pressurizes Drive Chamber B1 with regulated drive air, thus reversing the direction of the interconnected pistons, until the top of the Drive Air Piston switches the valve back to its original position. The interconnected pistons shuttle back and forth continuously, producing a high pressure air stream, determined by the discharge pressure set on the supply air regulator. **The Model S4020N5 Pressure Booster System is designed to operate at a maximum discharge pressure of 600 psig.**

WARRANTY

Midwest Pressure Systems, Inc. warrants the Model S4020N5 Pressure Booster System to be free of defects in material and workmanship for a period of one year after purchase, except piston seals, rod seals, and check valves which are warranted for six months after purchase. We will either repair or replace a failed unit returned by the customer. No other warranty is expressed or implied. Proof of the purchase date is required. This warranty does not apply to equipment which has been abused, and is voided by use of a lubricator, or failure to use a well-maintained inlet filter. Customers must obtain a return authorization number before shipping a unit to the factory.

MPS
MIDWEST PRESSURE SYSTEMS

Midwest Pressure Systems, Inc.
204 Easy Street
Carol Stream, IL 60188

Phone 630-933-9037
Fax 630-933-9040
www.midwestpressuresystems.com

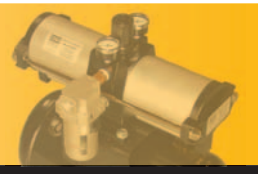

Manufacturer of Air and Gas Pressure Booster Systems