REVISIONS			
REV	DESCRIPTION	DATE	APPROVED

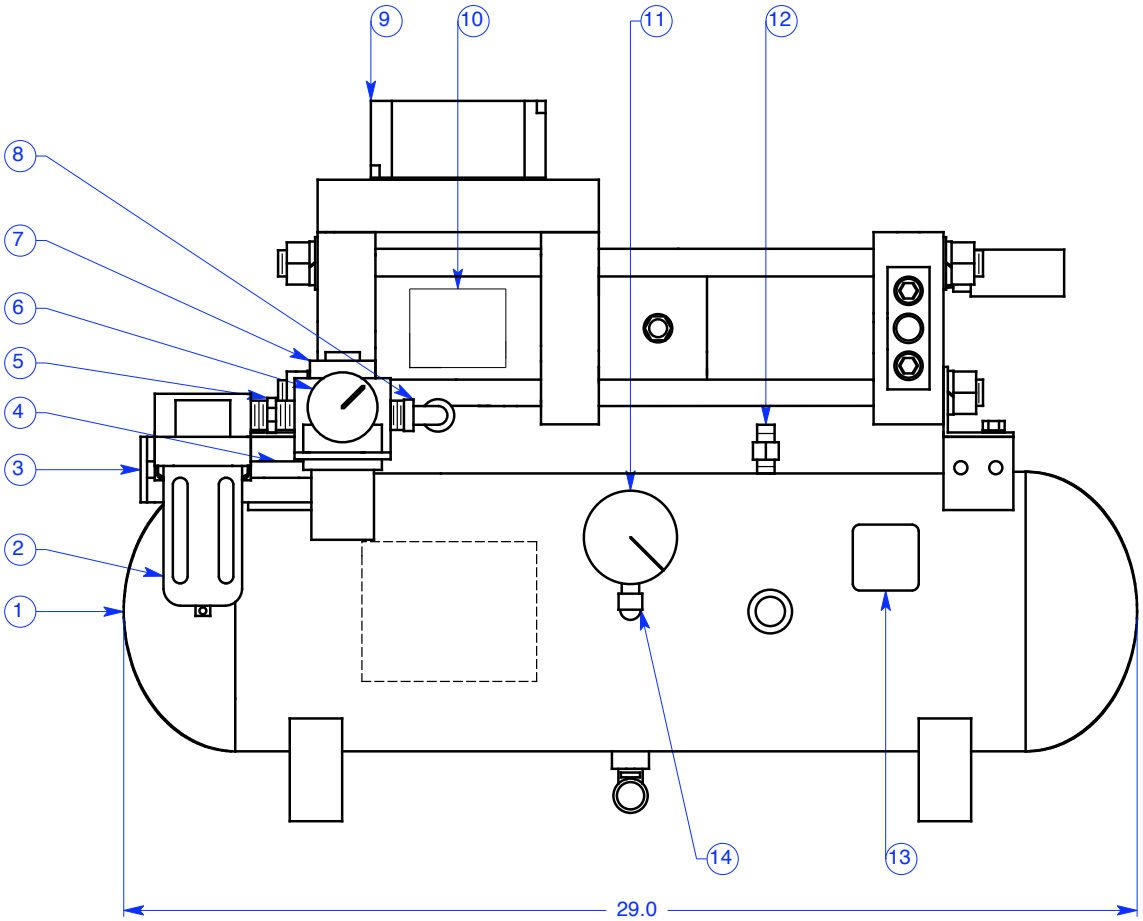

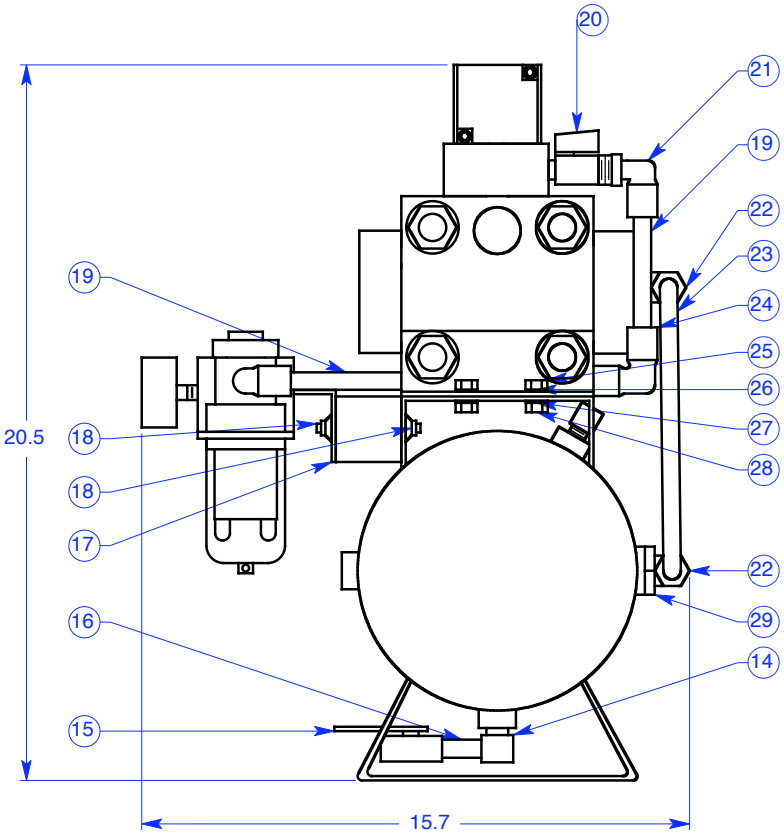

UNLESS OTHERWISE SPECIFIED	SIGNATURES		DATE
DIMENSIONS ARE IN INCHES	DRAWN	JEC	6/22/05
TOLERANCES ON:	CHECKED		
2 PL DECIMALS +/- 0.01	ENGRG		
3 PL DECIMALS +/- 0.003	ISSUED	JEC	6/22/05
ANGLES +/- 0.5°			
FRACTIONS +/- 1/16 32			
MATERIAL:			

MPS MIDWEST PRESSURE SYSTEMS

Midwest Pressure Systems, Inc.

204 Easy Street • Carol Stream, IL 60188

5:1 Nitrogen Booster System

B	DWG NO	S4020N5	REV
SCALE		SHEET	

Item	Part Number	Description	Qty.
1	P0252	5.5 gallon ASME receiver tank, 600 psi	1
2	1008F02	1/2 NPT Filter	1
3	2300N01	Nylon end cap	2
4	3008A01	Aluminum rail, .15m	1
5	1008N01	1/2 NPT Nipple, hex	1
6	1004G02	160 psi gauge	1
7	1008R01	1/2 NPT Regulator	1
8	1108L09	1/2 Tube by 1/2 NPT elbow, push-lock	1
9	4020AAV48	Pressure booster, 5:1 ratio	1
10	P0003	Product label, D0008-34	1
11	1004G01	Pressure gauge, 1000 psi	1
12	1004V01	Relief valve, 600 psi	1
13	P0003	Logo Label	1
14	1004L01	1/4 NPT Street elbow	2
15	1004V02	1/4" NPT Ball valve, br	1
16	1004N01	1/4" MNPT Nipple, br	1
17	2016B02	1008F02 Filter Bracket	1
18	2108S02	M8 tee screw, 19 mm w/ nut	4
19	1308N062	1/2 Nylon tubing, .062 wall, 200 psi	2
20	1006V02	3/8 NPT valve, mini-ball, 450 WOG	1
21	1108L11	1/2 Tube by 3/8 NPT elbow, push-lock	1
22	1108L07	1/2 Tube by 1/2 NPT elbow, br	2
23	1308C049	1/2" OD Tubing, copper	1
24	1108L10	1/2 Tube by 1/2 Tube elbow, push-lock	1
25	2020S04	5/16-18 Screw, 1.5" length	4
26	2020W01	5/16" Flatwasher	4
27	2020W03	5/16" Lockwasher	4
28	2020N01	5/16" Nut	4
29	1012B01	3/4 NPT by 1/2 NPT Bushing, br	1

REVISIONS

REV	DESCRIPTION	DATE	APPROVED

UNLESS OTHERWISE SPECIFIED
DIMENSIONS ARE IN INCHES
TOLERANCES ON:
2 PL DECIMALS +/- 0.01
3 PL DECIMALS +/- 0.003
ANGLES +/- 0.5°
FRACTIONS +/- 1/16
32
MATERIAL:

SIGNATURES		DATE
DRAWN	JEC	6/22/05
CHECKED		
ENGRG		
ISSUED	JEC	6/22/05

MPS MIDWEST PRESSURE SYSTEMS

Midwest Pressure Systems, Inc.
204 Easy Street • Carol Stream, IL 60188

5:1 Nitrogen Booster System

B | DWG NO S4020N5 | REV

SCALE | SHEET