Model S4020N3 Gas Pressure Booster System

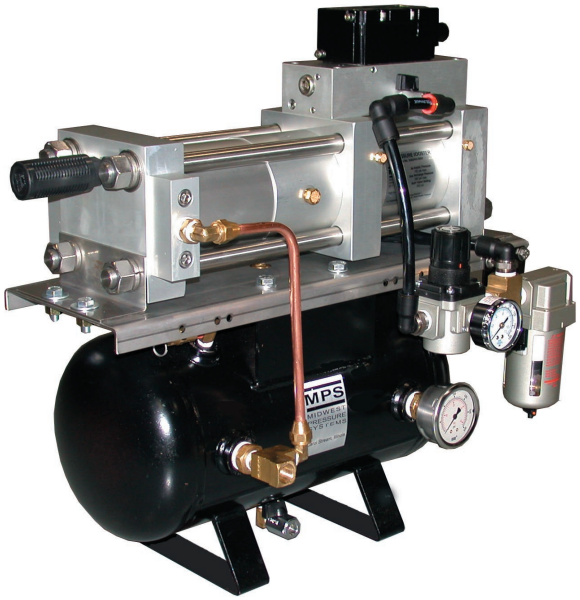

5 to 1 nominal boost ratio

340 psi maximum discharge pressure

This gas pressure booster system uses shop air to boost the pressure of a gas stream. The drive air piston reciprocates automatically and drives the gas compressor piston. The booster is unlubricated, and uses filled Teflon piston seals and rod seals. It requires no electricity, cooling water, or air-line lubricator and is explosionproof.

The maximum discharge pressure is equal to the sum of the gas supply pressure and 4 times the regulated drive air pressure. The graph shows the maximum flowrate capability for a range of shop air supply pressures and discharge pressures.

The boosted gas flowrate and discharge pressure can be controlled by throttling the drive air flowrate and/or regulating the drive air pressure. When there is no demand for high pressure gas, the booster stalls when it reaches the maximum discharge pressure. When there is a need for high pressure gas, the pressure in the discharge line drops which causes the booster to restart automatically.

Flowrate in SCFM

Discharge Pressure psi	Air Supply Pressure psi			
	60	80	100	120
200	6.4	9.6		
220	5.4	8.4		
240	4.4	7.9		
260	3.3	7.4	11.0	12
280	1.9	6.9	10.8	11.8
300		6.2	10.3	11.3
320		5.6	9.8	10.7
340		4.9	9.1	10

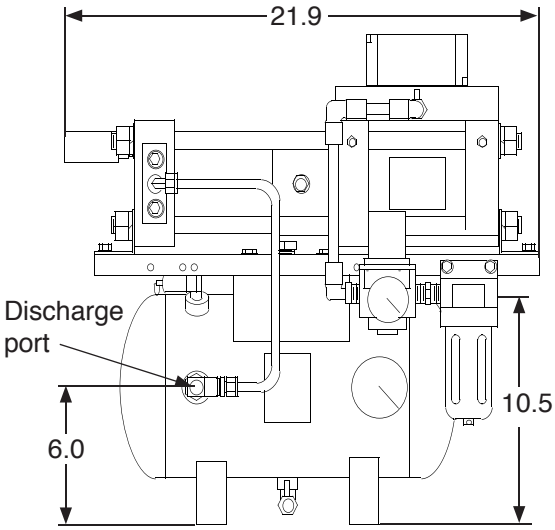

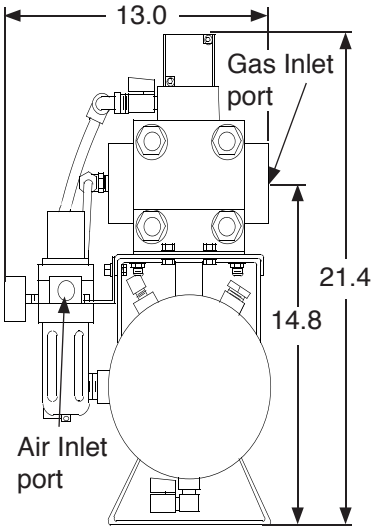

FEATURES

1/2 NPT female air supply port
1/2 NPT female gas supply port
350 psi safety relief valve
3/8 NPT female pipe discharge port
3.5 gallon, 350 psi ASME tank
1/4 NPT drain valve
Shop air supply filter
Shop air pressure regulator
Regulated air pressure gauge
Shop air shutoff valve
Exhaust muffler
Discharge pressure gauge

SPECIFICATIONS

Capable of 100% duty cycle
Shop air pressure range of 30-150 psig
Discharge pressure range of 30-340 psig
Temperature range of 40-130˚F
Approximate weight of 80 pounds

Features and specifications shown in this brochure are subject to change without notice.

MPS MIDWEST PRESSURE SYSTEMS

Midwest Pressure Systems, Inc.
204 Easy Street
Carol Stream, IL 60188

Phone 630-933-9037
Fax 630-933-9040
www.midwestpressuresystems.com

Manufacturer of Air and Gas Pressure Booster Systems