REVISIONS			
REV	DESCRIPTION	DATE	APPROVED

Item	Part Number	Description	Qty.
1	P0010	3.5 gal ASME receiver tank, 350 psi	1
2	1004L01	1/4 NPT Street elbow	2
3	1004V24	1/4 NPT, 350 psi relief valve, ASME	1
4	P0253	Mounting plate, 316 SS	1
5	1106L02	3/8 Tube by 1/2 NPT elbow, br	1
6	4020AAV48	Pressure booster, 5:1 boost ratio	1
7	1306C035	3/8"OD by .035 wall tubing, copper	1
8	1008P01	1/2" NPT Hex plug, br	2
9	1108L10	1/2 Tube to 1/2 Tube elbow, push-lock	1
10	1308N062	1/2 Nylon tubing, .062 wall	2
11	2135S01	M10 Screw, 35 mm, hexhead	4
12	2110W01	M10 Flat washer	4
13	1006V02	3/8 NPT valve, mini-ball, 450 WOG	1
14	1108L11	1/2 Tube by 3/8 NPT elbow, push-lock	1
15	P0003	Product label, D0008-33	1
16	1008R01	1/2 NPT Regulator	1
17	1108L09	1/2 Tube by 1/2 NPT elbow, push-lock	1
18	1004G02	160 psi gauge	1
19	1008N01	1/2 NPT Nipple, hex	1
20	1008F02	1/2 NPT Filter	1
21	1004G04	1/4 NPT, 600 psi Pressure gauge	1
22	P0003	MPS logo label	1
23	1004V13	Vent Valve	1
24	1106A11	3/8" Tube by 3/8" NPT union, br	1
25	1012B03	3/4" NPT by 3/8" NPT Bushing, br	1
26	1006T02	3/8 NPT Run tee, br	1
27	1012B02	3/4 MNPT by 1/4 FNPT Bushing, br	1
28	2016N02	1/4-20 Nut	2
29	2016W01	1/4 Lockwasher	2
30	2016B02	Filter mounting bracket	1
31	2016W02	1/4 Flat washer	2
32	2016S03	1/4-20 Hex cap screw	2
33	2020S04	5/16-18 Screw, 1.5" length	4
34	2020W01	5/16" Flatwasher	4
35	2020W03	5/16" Lockwasher	4
36	2020N01	5/16" Nut	4
37	2110W02	Lockwasher	4
38	2110N01	Nut	4

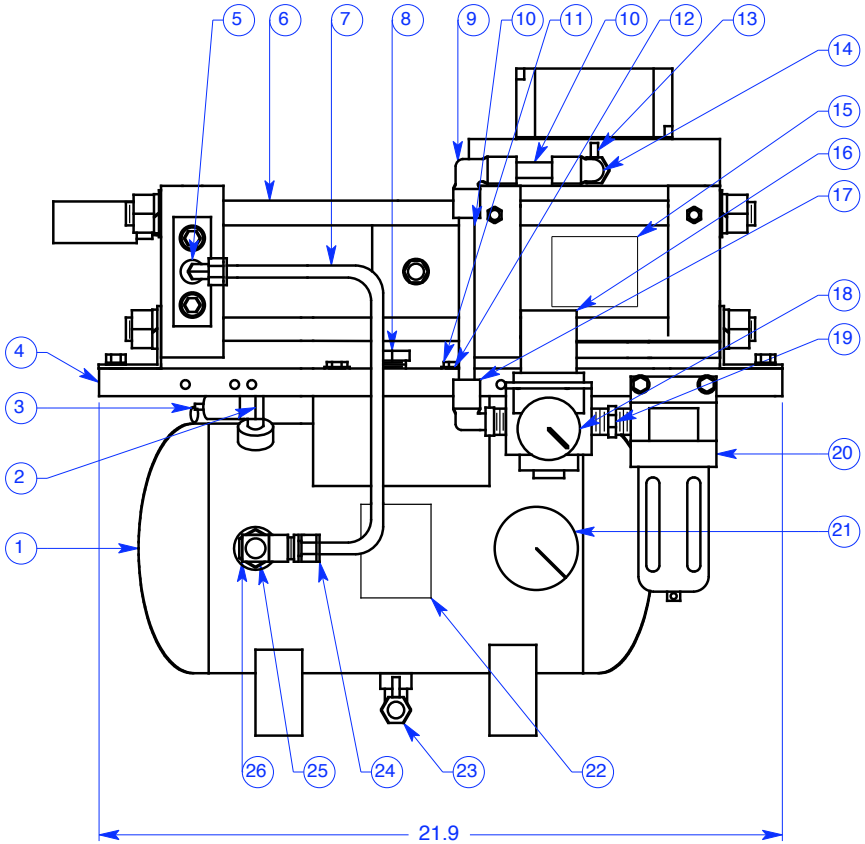

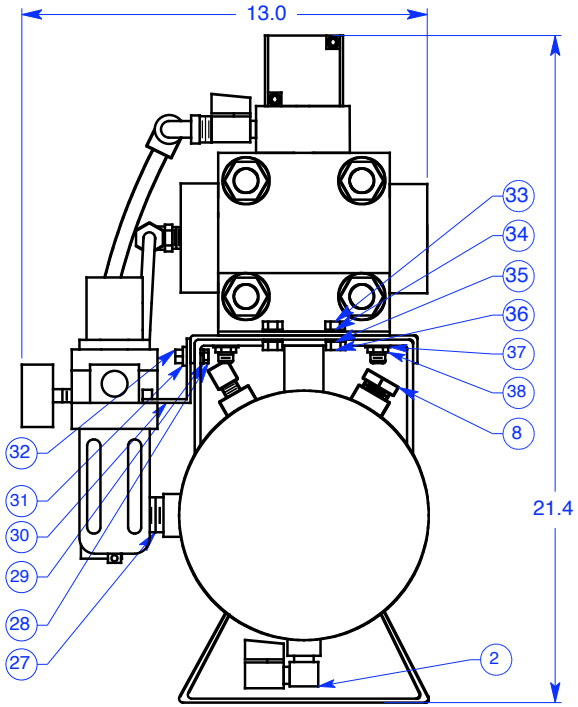

UNLESS OTHERWISE SPECIFIED	SIGNATURES		DATE
DIMENSIONS ARE IN INCHES	DRAWN	JEC	6/8/05
TOLERANCES ON:	CHECKED		
2 PL DECIMALS +/- 0.01	ENGRG		
3 PL DECIMALS +/- 0.003	ISSUED	JEC	6/8/05
ANGLES +/- 0.5°			
FRACTIONS +/- 1/16 32			
MATERIAL:			

MPS MIDWEST PRESSURE SYSTEMS

Midwest Pressure Systems, Inc.

204 Easy Street • Carol Stream, IL 60188

5:1 Nitrogen Booster System

B	DWG NO	S4020N3	REV
SCALE		SHEET	