REVISIONS			
REV	DESCRIPTION	DATE	APPROVED

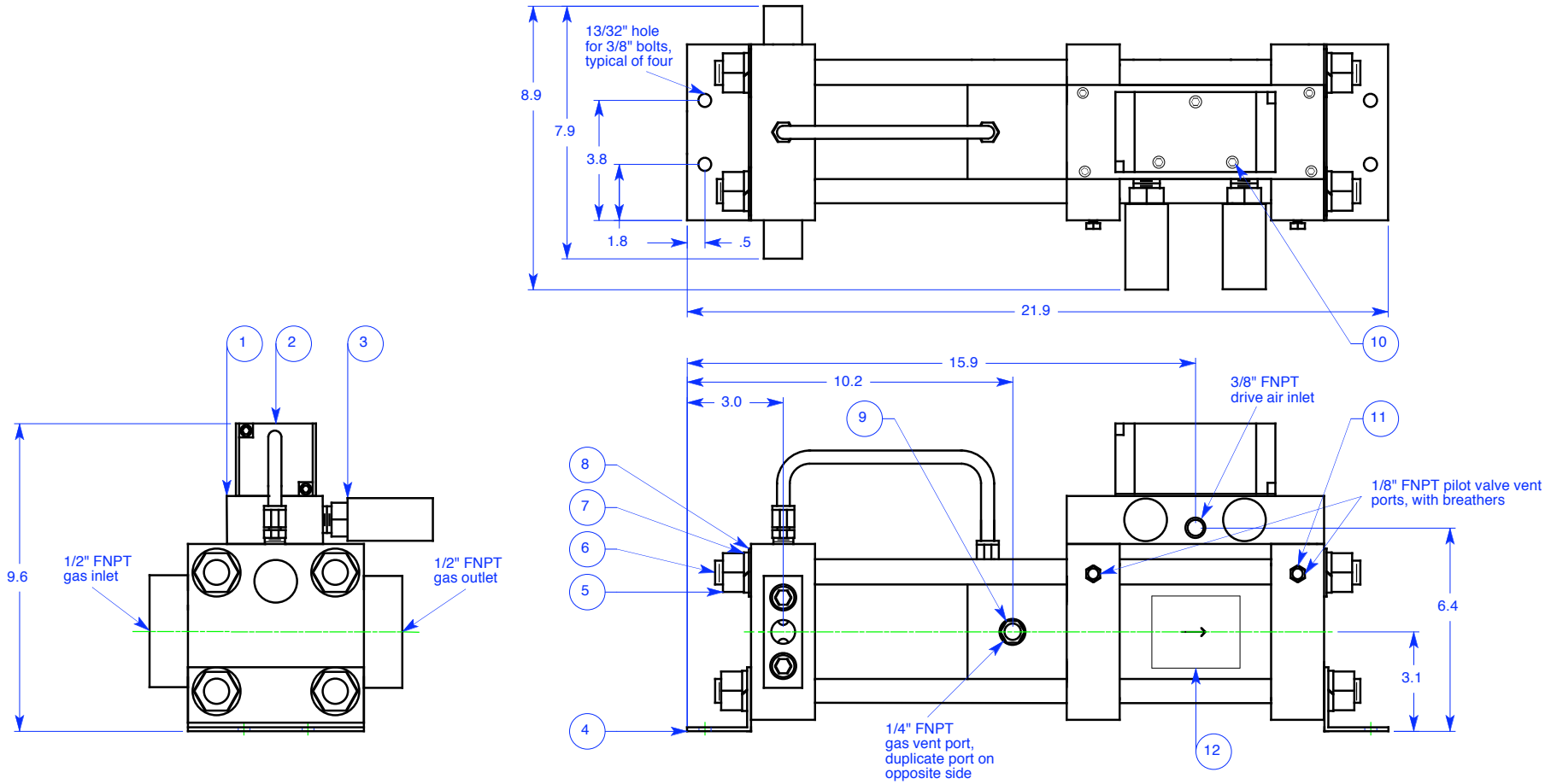

SIGNATURES		DATE
DRAWN	JEC	11/1/04
CHECKED		
ENGRG	RAV	11/1/04
ISSUED		

MPS MIDWEST PRESSURE SYSTEMS

Midwest Pressure Systems, Inc.
204 Easy Street • Carol Stream, IL 60188

General Arrangement

B	DWG NO	4030AAV34	REV
SCALE		SHEET 1 of 4	

REVISIONS			
REV	DESCRIPTION	DATE	APPROVED

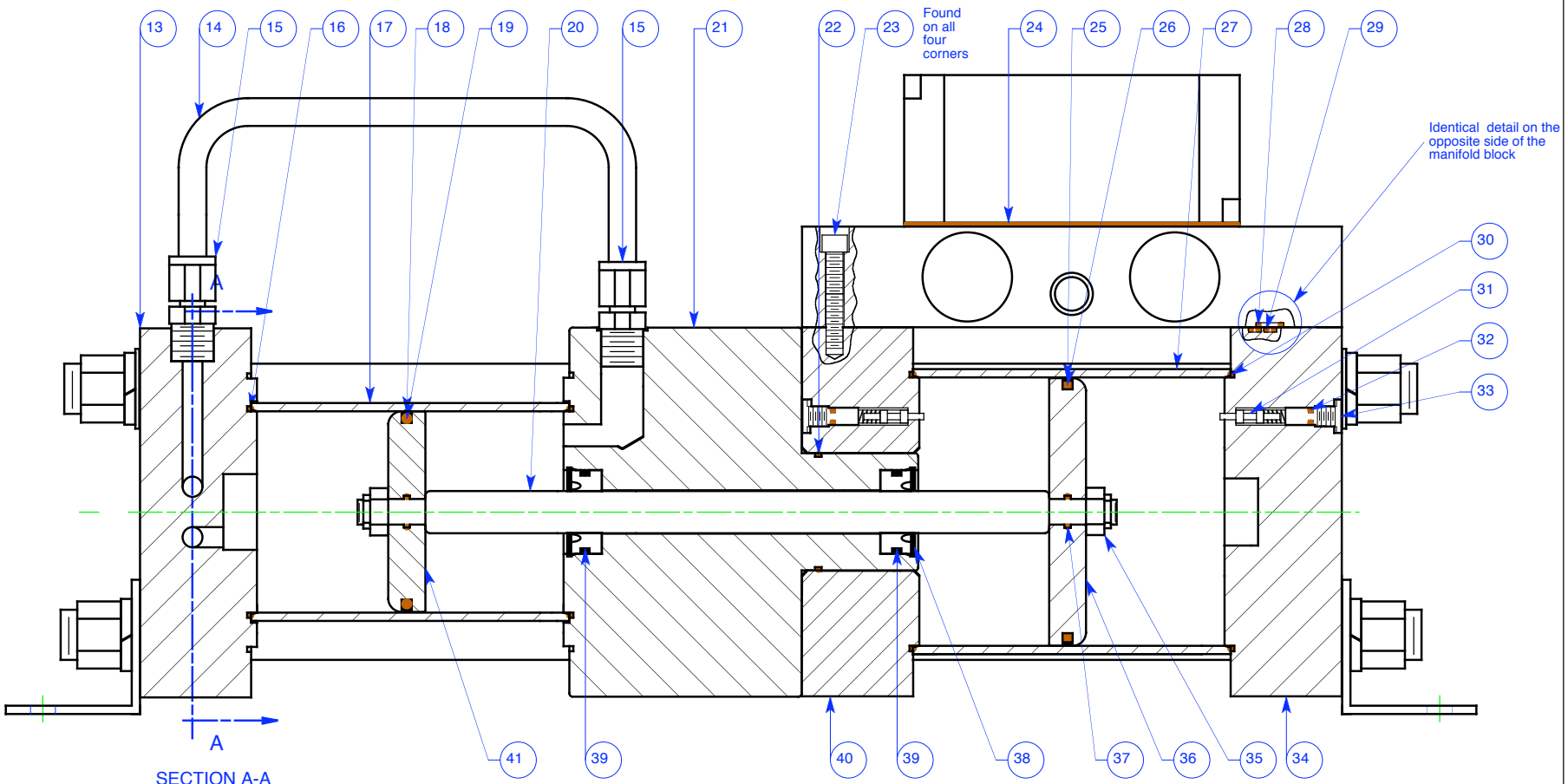

SECTION A-A
DETAILS ON
SHEET 3 OF 4

SIGNATURES		DATE
DRAWN	JEC	11/1/04
CHECKED		
ENGRG		
ISSUED	RAV	11/1/04

MPS MIDWEST PRESSURE SYSTEMS

Midwest Pressure Systems, Inc.
204 Easy Street • Carol Stream, IL 60188

Booster Assembly

B	DWG NO 4030AAV34	REV
SCALE		SHEET 2 of 4

REVISIONS			
REV	DESCRIPTION	DATE	APPROVED

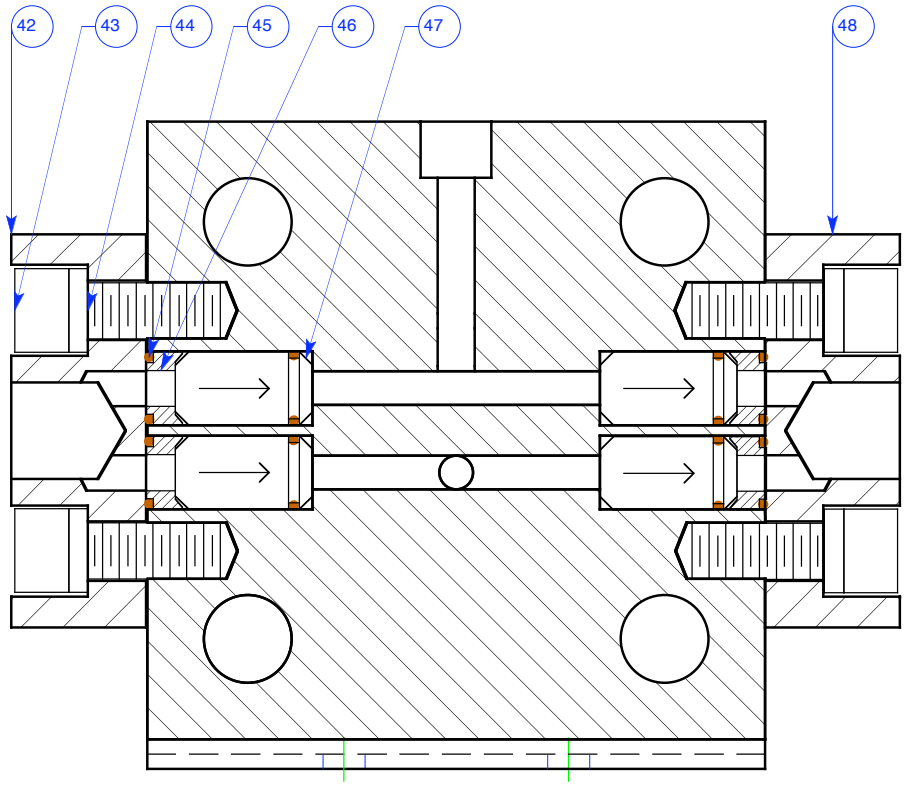

SECTION A-A
CHECK VALVE DETAIL

SIGNATURES		DATE
DRAWN	JEC	11/1/04
CHECKED		
ENGRG		
ISSUED	RAV	11/1/04

MPS MIDWEST PRESSURE SYSTEMS

Midwest Pressure Systems, Inc.
204 Easy Street • Carol Stream, IL 60188

Gas Cap Assembly

B | DWG NO 4030AAV34 | REV

SCALE | SHEET 3 of 4

REVISIONS			
REV	DESCRIPTION	DATE	APPROVED

Item	Part Number	Description	Material	Qty.
1	6200N01	Air manifold	Anodized Aluminum	1
2	6200N02	4-way control valve	Epoxy-coated Aluminum	1
3	1008M04	1/2" NPT exhaust silencer	Polybutylene	2
4	P0243	Mounting bracket	Stainless Steel	2
5	6200N17	3/4-16 Nut	Stainless Steel	8
6	6200N18	3/4" Tie rod	Stainless Steel	4
7	2048W02	3/4" Lockwasher	Stainless Steel	8
8	2048W03	3/4" Flat washer	Stainless Steel	4
9	1004M02	Breather	Bronze	2
10	2016S11	1/4-20 by 2.25" Socket cap screw	Stainless Steel	3
11	1002M01	Breather	Bronze	2
12	D0008-18	Product label	Polyester	1
13	6200N19	Boost Cap	Anodized Aluminum	1
14	1306X035	3/8" tubing	Stainless Steel	1
15	1106A04	3/8" MNPT Swagelok union	316 SS	2
16	2201B041	O-ring, -041	Buna-N	2
17	6200N21	3"Ø Cylinder	Anodized Aluminum	1
18	2505T01	3" Piston Seal	Teflon/Carbon Fiber	1
19	2201V231	O-ring	Viton	1
20	P0241	Piston rod	Stainless Steel	1
21	6200N20	Distance piece	Anodized Aluminum	1
22	2201B030	O-ring, -030, Buna	Buna-N	1
23	2016S11	10-32 by 1.5" Socket cap screw	Stainless Steel	4
24	6200N03	Air manifold gasket	Buna-N	1

Item	Part Number	Description	Material	Qty.
25	2505T02	4" Piston seal	Teflon/Carbon Fiber	1
26	2201B239	O-ring	Buna-N	1
27	6200N04	4"Ø Cylinder	Anodized Aluminum	1
28	2201B013	O-ring, -013	Buna-N	2
29	2201B004	O-ring, -004	Buna-N	6
30	2201B045	O-ring, -045	Buna-N	2
31	6200N05	Pilot valve assembly	SS & Buna-N	2
32	2201B008	O-ring, -008	Buna-N	2
33	6200N06	Pilot cap	Stainless Steel	2
34	6200N07	End air cap	Anodized Aluminum	1
35	2024N03	3/8-16 locknut	Stainless Steel	2
36	P0189	4"Ø Piston	Anodized Aluminum	1
37	2201V012	Rod seal o-ring	Viton	2
38	2196R03	Retaining ring	Stainless Steel	2
39	2551T10	5/8" Single rod seal/bushing	Teflon/Carbon Fiber & Viton	2
40	6200N08	Center air cap	Anodized Aluminum	1
41	P0189	3"Ø Piston	Anodized Aluminum	1
42	6200N14A	Check valve cover, inlet	Anodized Aluminum	1
43	6200N15	1/2-13 by 1-1/4 Socket cap screw	Stainless Steel	4
44	6200N16	1/2" Lockwasher	Stainless Steel	4
45	2203V015	O-ring	Viton	8
46	P0239	Check valve spacer	Teflon	4
47	1110V02	Cartridge check valve	Stainless Steel	4
48	6200N14B	Check valve cover, outlet	Anodized Aluminum	1

SIGNATURES		DATE
DRAWN	JEC	11/1/04
CHECKED		
ENGRG		
ISSUED	RAV	11/1/04

MPS MIDWEST PRESSURE SYSTEMS

Midwest Pressure Systems, Inc.
204 Easy Street • Carol Stream, IL 60188

Bill of Materials

B | DWG NO 4030AAV34 | REV

SCALE | SHEET 4 of 4