REVISIONS			
REV	DESCRIPTION	DATE	APPROVED

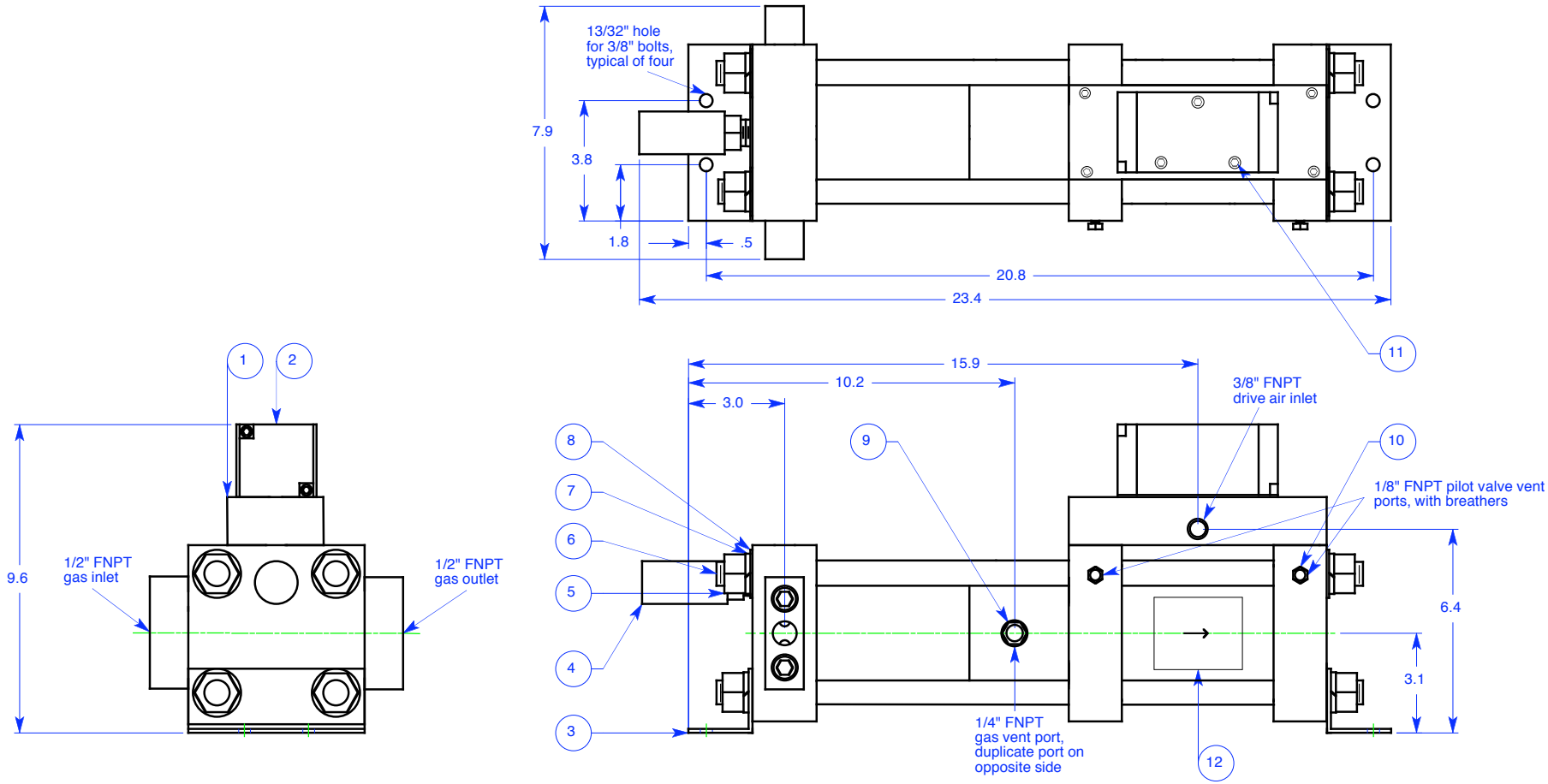

SIGNATURES		DATE
DRAWN	JEC	10/29/04
CHECKED		
ENGRG	RAV	10/29/04
ISSUED		

MPS MIDWEST PRESSURE SYSTEMS

Midwest Pressure Systems, Inc.
204 Easy Street • Carol Stream, IL 60188

General Arrangement

B	DWG NO	4020AAV48	REV
SCALE		SHEET 1 of 4	

REVISIONS			
REV	DESCRIPTION	DATE	APPROVED

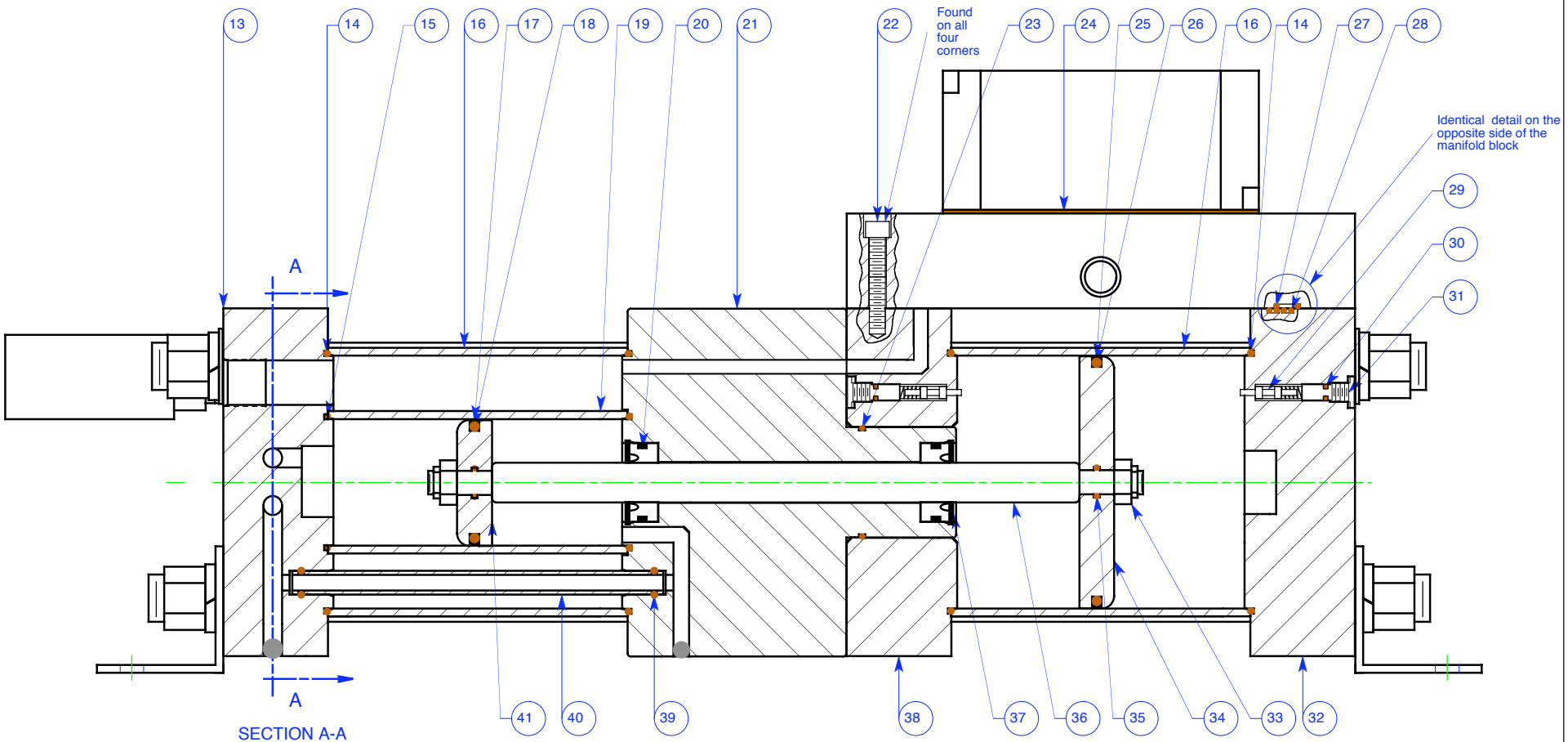

SECTION A-A
DETAILS ON
SHEET 3 OF 4

SIGNATURES		DATE
DRAWN	JEC	10/29/04
CHECKED		
ENGRG		
ISSUED	RAV	10/29/04

MPS MIDWEST PRESSURE SYSTEMS

Midwest Pressure Systems, Inc.
204 Easy Street • Carol Stream, IL 60188

Booster Assembly

B	DWG NO	4020AAV48	REV
SCALE		SHEET 2 of 4	

REVISIONS			
REV	DESCRIPTION	DATE	APPROVED

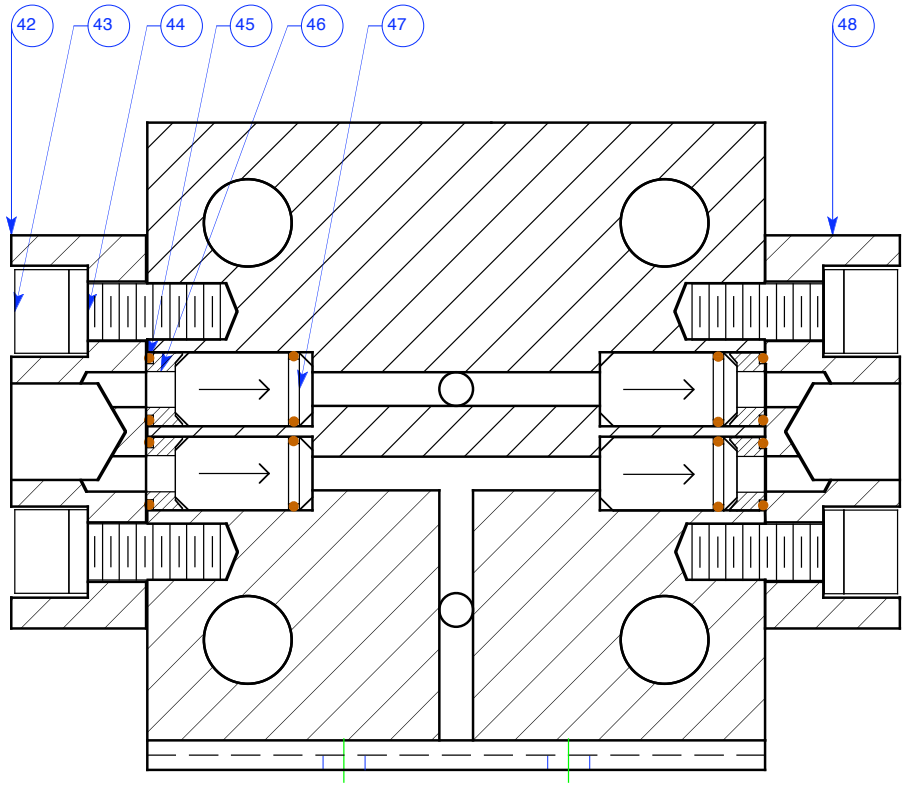

SECTION A-A
CHECK VALVE DETAIL

SIGNATURES		DATE
DRAWN	JEC	10/29/04
CHECKED		
ENGRG		
ISSUED	RAV	10/29/04

MPS MIDWEST PRESSURE SYSTEMS

Midwest Pressure Systems, Inc.
204 Easy Street • Carol Stream, IL 60188

Gas Cap Assembly

B | DWG NO 4020AAV48 | REV

SCALE | SHEET 3 of 4

REVISIONS			
REV	DESCRIPTION	DATE	APPROVED

Item	Part Number	Description	Material	Qty.
1	6200N09	Air manifold	Anodized Aluminum	1
2	6200N02	4-way control valve	Epoxy-coated Aluminum	1
3	P0243	Mounting bracket	Stainless Steel	2
4	1008M04	1/2" NPT Exhaust silencer	Polybutylene	2
5	6200N17	3/4-16 Nut	Stainless Steel	8
6	6200N18	3/4" Tie rod	Stainless Steel	4
7	2048W02	3/4" Lockwasher	Stainless Steel	8
8	2048W03	3/4" Flat washer	Stainless Steel	4
9	1004M02	Breather	Bronze	2
10	1002M01	Breather	Bronze	2
11	2016S11	1/4-20 by 2.25" socket cap screw	Stainless Steel	3
12	D0008-7	Product label	Polyester	1
13	6200N10	Boost cap	Anodized Aluminum	1
14	2201B045	O-ring, -045	Buna-N	4
15	2201B033	O-ring	Buna-N	2
16	6200N04	4"Ø Cylinder	Anodized Aluminum	2
17	2505T06	2" Piston seal	Teflon/Carbon Fiber	1
18	2201V223	O-ring, -223	Viton	1
19	6200N11	2"Ø Cylinder	Anodized Aluminum	1
20	2551T10	5/8" Single rod seal/bushing	Teflon/Carbon Fiber & Viton	2
21	6200N12	Distance piece	Anodized Aluminum	1
22	2016S11	10-32 by 1.5" Socket cap screw	Stainless Steel	4
23	2201B030	O-ring, -030, Buna	Buna-N	1
24	6200N03	Air manifold gasket	Buna-N	1

Item	Part Number	Description	Material	Qty.
25	2505T02	4" Piston seal	Teflon/Carbon Fiber	1
26	2201B239	O-ring	Buna-N	1
27	2201B013	O-ring, -013	Buna-N	2
28	2201B004	O-ring, -004	Buna-N	6
29	6200N05	Pilot valve assembly	SS & Buna-N	2
30	2201B008	O-ring, -008	Buna-N	2
31	6200N06	Pilot cap	Stainless Steel	2
32	6200N07	End air cap	Anodized Aluminum	1
33	2024N03	3/8-16 locknut	Stainless Steel	2
34	P0189	4"Ø Piston	Anodized Aluminum	1
35	2201V012	Rod seal o-ring	Viton	2
36	P0241	Piston rod	Stainless Steel	1
37	2196R03	Retaining ring	Stainless Steel	2
38	6200N13	Center air cap	Anodized Aluminum	1
39	2201B1.5-7	O-ring	Buna-N	2
40	P0249	Manifold tube	Anodized Aluminum	1
41	P0248	2"Ø Piston	Anodized Aluminum	1
42	6200N14A	Check valve cover, inlet	Anodized Aluminum	1
43	6200N15	1/2-13 by 1-1/4 Socket cap screw	Stainless Steel	4
44	6200N16	1/2" Lockwasher	Stainless Steel	4
45	2203V015	O-ring	Viton	8
46	P0239	Check valve spacer	Teflon	4
47	1110V02	Cartridge check valve	Stainless Steel	4
48	6200N14B	Check valve cover, outlet	Anodized Aluminum	1

SIGNATURES		DATE
DRAWN	JEC	10/29/04
CHECKED		
ENGRG		
ISSUED	RAV	10/29/04

MPS MIDWEST PRESSURE SYSTEMS

Midwest Pressure Systems, Inc.
204 Easy Street • Carol Stream, IL 60188

Bill of Materials

B | DWG NO 4020AAV48 | REV

SCALE | SHEET 4 of 4