Model S4030A3 Air Pressure Booster System

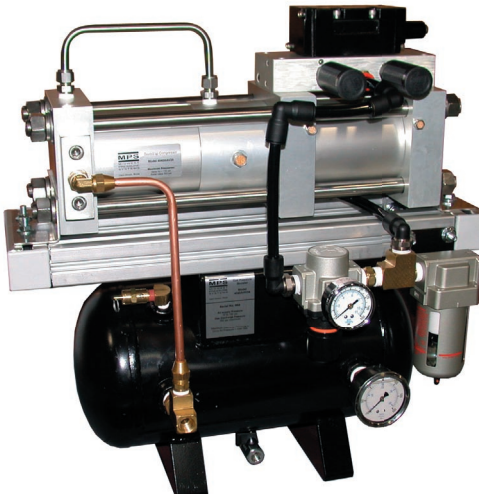

2.7 to 1 maximum boost ratio
340 psi maximum discharge pressure

This air pressure booster system uses shop air to boost the pressure of a shop air stream. The drive air piston reciprocates automatically and drives the air compressor piston. The booster is unlubricated, and uses filled Teflon piston seals and rod seals. It requires no electricity, cooling water, or air-line lubricator and is explosionproof.

The maximum discharge pressure is equal to the sum of the shop air supply pressure and 1.78 times the regulated drive air pressure. The table below shows the maximum flowrate capability for a range of shop air supply pressures and discharge pressures.

The boosted air flowrate and discharge pressure can be controlled by throttling the drive air flowrate and/or regulating the drive air pressure. When there is no demand for high pressure air, the booster stalls when it reaches the maximum discharge pressure. When there is a need for high pressure air, the pressure in the discharge line drops which causes the booster to restart automatically.

Supply Pressure psi	Maximum Flowrate scfm	Discharge Pressure psi
50	3	50-125
60	4	60-150
70	5	70-175
80	6	80-200
90	7	90-220
100	8	100-240
110	9	110-260
120	10	120-280

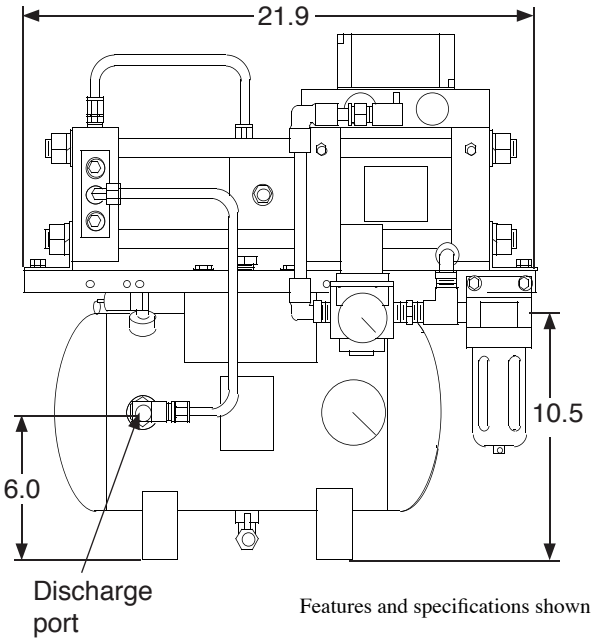

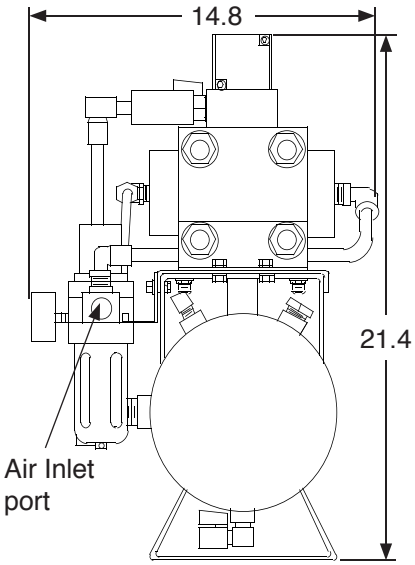

FEATURES
1/2 NPT female gas inlet port
350 psi safety relief valve
3/8 NPT female pipe discharge port
3.5 gallon, 350 psi ASME tank
1/4 NPT drain valve
1/2 NPT shop air supply filter
Shop air pressure regulator
Regulated air pressure gauge
Shutoff valve
Exhaust muffler (2)
Discharge pressure gauge

SPECIFICATIONS
Capable of 100% duty cycle
Shop air pressure range of 30-150 psig
Discharge pressure range of 30-340 psig
Temperature range of 40-130˚F
Approximate weight of 80 pounds

Features and specifications shown in this brochure are subject to change without notice.

MPS
MIDWEST PRESSURE SYSTEMS

Midwest Pressure Systems, Inc.
204 Easy Street
Carol Stream, IL 60188

Phone 630-933-9037
Fax 630-933-9040
www.midwestpressuresystems.com

Manufacturer of Air and Gas Pressure Booster Systems