Model S4020A5 Air Pressure Booster System

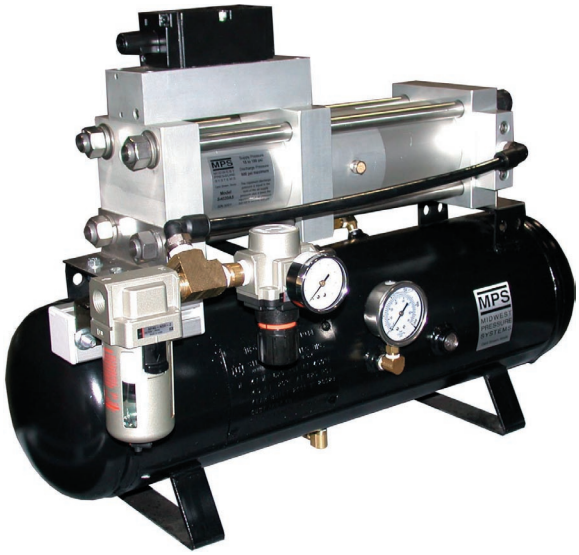

5 to 1 maximum boost ratio

600 psi maximum discharge pressure

This air pressure booster system uses shop air to boost the pressure of a shop air stream. The drive air piston reciprocates automatically and drives the air compressor piston. The booster is unlubricated, and uses filled Teflon piston seals and rod seals. It requires no electricity, cooling water, or air-line lubricator and is explosionproof.

The maximum discharge pressure is equal to the sum of the shop air supply pressure and 4 times the regulated drive air pressure. The table below shows the maximum flowrate capability for a range of shop air supply pressures and discharge pressures.

The boosted air flowrate and discharge pressure can be controlled by throttling the drive air flowrate and/or regulating the drive air pressure. When there is no demand for high pressure air, the booster stalls when it reaches the maximum discharge pressure. When there is a need for high pressure air, the pressure in the discharge line drops which causes the booster to restart automatically.

Flowrate in SCFM

Discharge Pressure psi	Air Supply Pressure psi			
	60	80	100	120
200	6.4	9.6		
240	4.1	7.9		
280	1.8	6.9	10.8	12
320		5.6	9.8	11.5
360		4.1	8.5	11.0
400			7.0	10.3
440			5.8	9.5
480			2.5	8.0
520				5.0
560				4.0

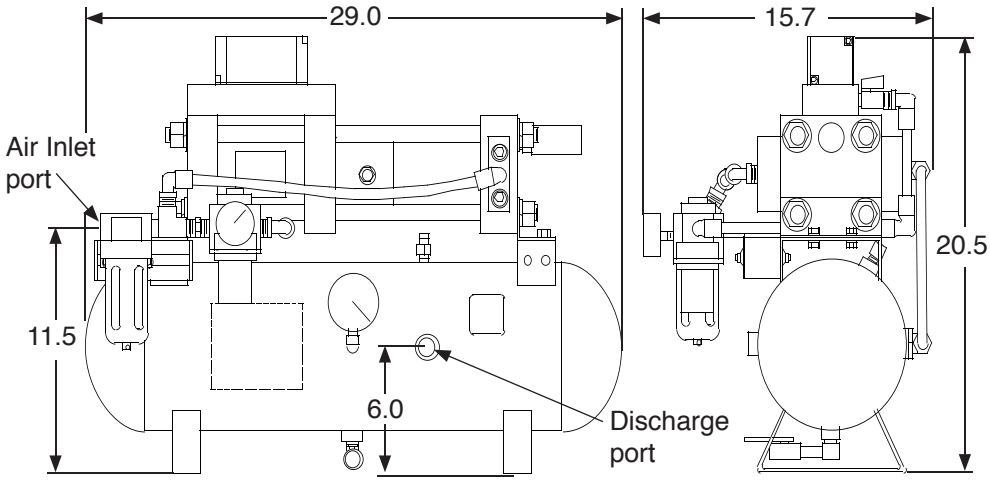

FEATURES

- 1/2 NPT female air supply port
- 600 psi safety relief valve
- 1/2 NPT female pipe discharge port
- 5.5 gallon, 625 psi ASME tank
- 1/4 NPT drain valve
- Shop air supply filter
- Shop air pressure regulator
- Regulated air pressure gauge
- Shutoff valve
- Exhaust muffler
- Discharge pressure gauge

SPECIFICATIONS

- Capable of 100% duty cycle
- Shop air pressure range of 30-150 psig
- Discharge pressure range of 30-590 psig
- Temperature range of 40-130˚F
- Approximate weight of 95 pounds

Features and specifications shown in this brochure are subject to change without notice.

MPS MIDWEST PRESSURE SYSTEMS

Midwest Pressure Systems, Inc.
204 Easy Street
Carol Stream, IL 60188

Phone 630-933-9037
Fax 630-933-9040
www.midwestpressuresystems.com

Manufacturer of Air and Gas Pressure Booster Systems