Model Number R12D

Bootstrap Compressor 2:1 Ratio Air Pressure Booster

The Bootstrap Compressor is an air-driven, air pressure booster. It requires no electricity, cooling water, or air-line lubricator and is explosionproof. Shop air is fed to the inlet port through a filter, and is split into two streams inside the booster. One stream flows to the compressor portion of the unit and is boosted to higher pressure. The other stream drives the compressor portion, and is consumed during booster operation. The drive air stream is regulated to maintain the discharge pressure set by the external regulator handle. Drive air consumption is approximately 1/2 to 1 times the amount of pressure-boosted air. For example, if 10 scfm of high pressure air is required, the Bootstrap Compressor will need 15-20 scfm of shop air, and 5-10 scfm of that air will be vented through an exhaust silencer. For a given shop air pressure, Model R12D can deliver high pressure air at any flowrate up to the maximum shown in the table. The pressure regulator enables the booster to adjust automatically to changes in high pressure air demand or shop air pressure. When there is no demand for high pressure air, the booster stalls at the discharge pressure set by the regulator and consumes no energy. When there is a need for high pressure air, the tank pressure drops which causes the booster to restart automatically.

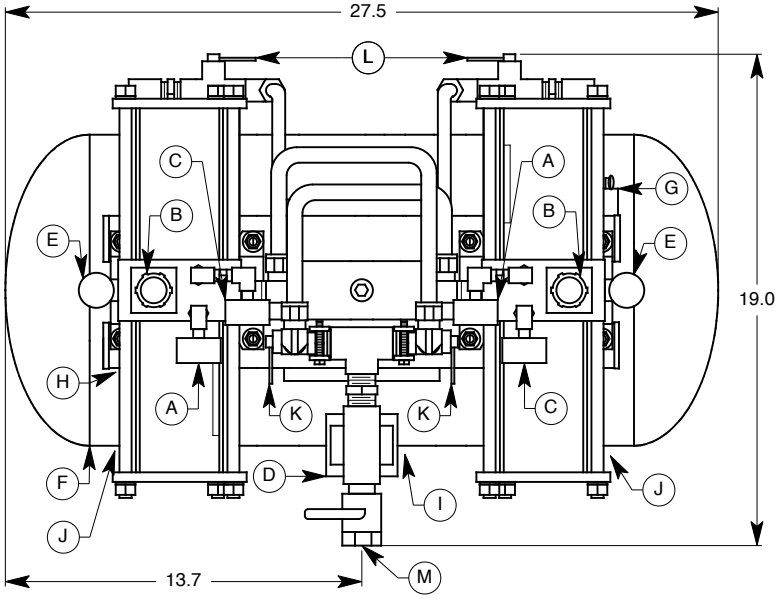

*Dimensions are in inches. The height of the system is approximately 26 inches.

MODEL R12D FEATURES

A. Inlet pressure gauge
B. Built-in pressure regulator
C. Discharge pressure gauge
D. 3/4" FNPT inlet filter
E. Exhaust silencer
F. 12 gallon, 235 psig ASME tank
G. 235 psig ASME safety valve
H. 1/2" FNPT discharge port
I. 1/4" FNPT condensate drain valve
J. Four 1/2" diameter mounting holes
K. 1/2" FNPT booster shutoff valve
L. 1/2" FNPT safety vent valve
M. 3/4" FNPT air inlet shutoff valve

MODEL R12D SPECIFICATIONS

Maximum 2 to 1 boost ratio
Capable of 100% duty cycle
Inlet pressure range of 15-150 psig
Discharge pressure range of 15-230 psig
Temperature range of 40-130°F
Approximate weight of 80 pounds
Integral regulator controls discharge pressure and is self-relieving

MPS
MIDWEST PRESSURE SYSTEMS

Midwest Pressure Systems, Inc.
1035 Entry Drive, Bensenville, IL 60106
Phone 630-766-6049 Fax 630-766-6236

www.midwestpressuresystems.com

Model R12D Flowrate vs Supply and Discharge Pressure

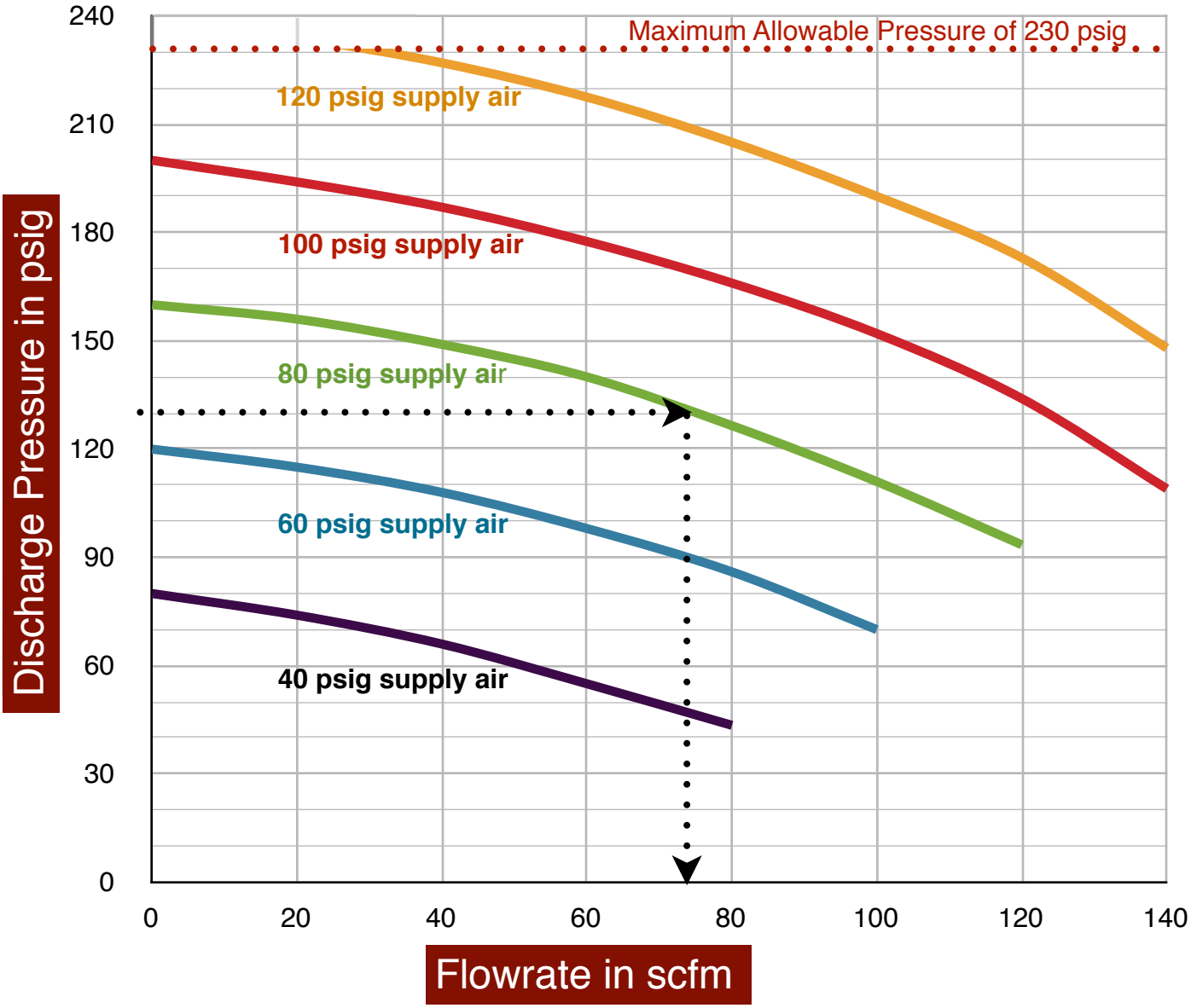

Use the curves above to determine the Model R12D air pressure booster maximum discharge flowrate for a given set of operating conditions. In the example shown above, a maximum discharge pressure of 130 psig is desired and 80 psi supply air is available. Follow the 130 psi line until it intersects with the 80 psi supply air curve. Draw a vertical line from the intersection down to the bottom line to determine the maximum flowrate of 74 scfm. The booster can operate at any flowrate from 0 to the maximum flowrate. It will automatically adjust its operating speed as long as the required flowrate is in this range.

MPS
MIDWEST PRESSURE SYSTEMS

Midwest Pressure Systems, Inc.
1035 Entry Drive, Bensenville, IL 60106
Phone 630-766-6049 Fax 630-766-6236

www.midwestpressuresystems.com