Rev. 2/18/09

MPS
MIDWEST
PRESSURE
SYSTEMS

Pressure Booster Technical Manual

Model Numbers

4040AAV24
4030AAV34
4020AAV48

MPS
MIDWEST
PRESSURE
SYSTEMS

Midwest Pressure Systems, Inc.
1035 Entry Drive
Bensenville, IL 60106

Phone 630-766-6049
Fax 630-766-6236
www.midwestpressuresystems.com

Manufacturer of Air and Gas Pressure Booster Systems

Table of Contents and Model Numbering System

1 Design Specifications

2 Materials of Construction and Torque Specifications

3 Flow Curves

4 Boost Cylinder Operation

5 Drive Air System Operation

6 Installation, Startup, Operation, Maintenance and Warranty

7 Assembly Drawing

Model Numbering System

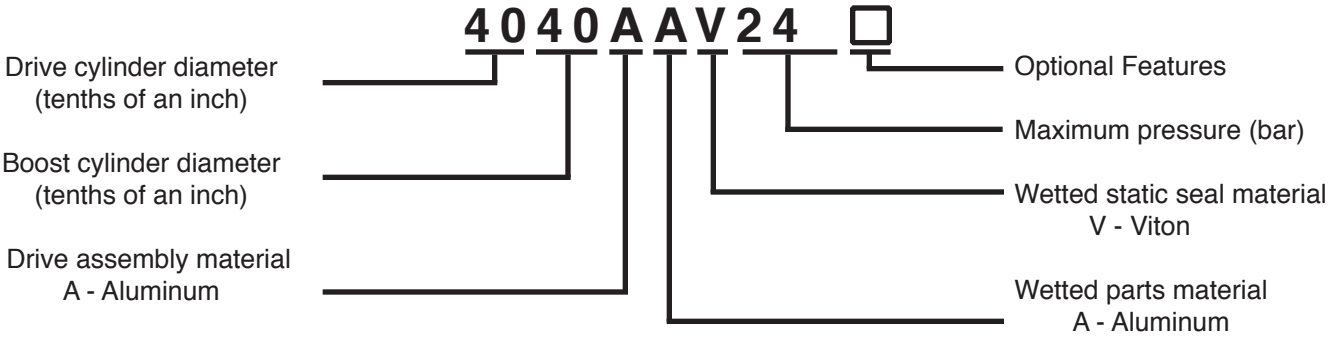

MPS MIDWEST PRESSURE SYSTEMS

MMidwest Pressure Systems, Inc.
1035 Entry Drive
Bensenville, IL 60106

Phone 630-766-6049
Fax 630-766-6236
www.midwestpressuresystems.com

Manufacturer of Air and Gas Pressure Booster Systems

1 Design Specifications

Midwest Pressure Systems, Inc. (MPS) gas boosters are designed for ease of operation and maintenance. Experience has shown that an MPS booster will normally provide years of satisfactory performance with minimal maintenance.

While MPS gas boosters share many similarities, each model has some unique specifications. Carefully review the operating manual to understand your gas booster model and its operating capabilities and limitations.

This manual is designed to provide information on installation, start up, operation and maintenance of the three models described in the table below. If you have questions, please contact Midwest Pressure Systems, Inc.

Engineering Specifications	Model Numbers		
	4040AAV24	4030AAV34	4020AAV48
Maximum gas discharge pressure - psi (bar)	348 (24)	493 (34)	696 (48)
Gas temperature range - ˚F (˚C)	-15 to 300 (-26 to 149)	-15 to 300 (-26 to 149)	-15 to 300 (-26 to 149)
Maximum recommended cycle rate - cpm (Note 1)	100	100	100
Gas displacement per cycle - cf (l)	.057 (1.63)	.032 (.905)	.014 (.396)
Maximum gas displacement - cfm (lpm)	5.7 (161)	3.2 (90.1)	1.4 (39.6)
Pressure boost (multiple of drive air pressure) (Note 2)	0.75	1.4	3.2
Gas inlet and discharge connections FNPT	1/2	1/2	1/2
Seal vent connections (two) FNPT	1/4	1/4	1/4
Maximum drive pressure - psi (bar) (Note 3)	150 (10.3)	150 (10.3)	150 (10.3)
Air temperature range - ˚F (˚C)	32 to 200 (0 to 93)	32 to 200 (0 to 93)	32 to 200 (0 to 93)
Air displacement per cycle - cf (l)	.058 (1.64)	.058 (1.64)	.058 (1.64)
Maximum air displacement - cfm (lpm)	5.8 (164)	5.8 (164)	5.8 (164)
Drive air inlet connection FNPT	3/8	3/8	3/8
Drive air exhaust connections FNPT	1/2 (two)	1/2 (two)	1/2 (one)
Drive air cylinder bore diameter - in (mm)	4 (102)	4 (102)	4 (102)
Gas boost cylinder bore diameter - in (mm)	4 (102)	3 (76.2)	2 (50.8)
Piston rod diameter - in (mm)	0.625 (15.9)	0.625 (15.9)	.0625 (15.9)
Stroke - in (mm)	4	4	4
Weight - lbs (kg)	44 (20)	43 (20)	45 (20)
Ambient Temperature - ˚F (˚C) (Note 4)	5 to 200 (-15 to 93)	5 to 200 (-15 to 93)	5 to 200 (-15 to 93)

Note 1: A cycle consists of a forward and reverse stroke.
Note 2: This is a nominal operating pressure boost ratio, not the maximum pressure boost ratio.
Note 3: Nitrogen or clean inert gas may also be used for the drive gas.
Note 4: Where ambient temperatures fall below 32˚F (0˚C) a heater is required for the drive air .

2 Materials of Construction and Torque Specifications

Materials of Construction

Process gas wetted materials
Anodized aluminum and stainless steel

Pneumatic drive materials exposed to the environment
Anodized aluminum for excellent general environmental corrosion resistance

External bolts, studs (tie rods), nuts and washers
303 SS tie rods and 18-8 SS nuts bolts and washers for corrosion resistance

Dynamic seal material
Carbon fiber filled Teflon piston rings and rod seals

Gas wetted static seals
Viton

Air drive static seals
Buna-N

Material specifications for individual components are listed on the Bill of Materials Sheet of the Assembly Drawing.

Fastener Torque Specifications

Fastener Description	Size Inch TPI	Type	Torque Lb-Ft (N•m)
Check Valve Cover Screws	3/8-16 UNC	316 SS socket head cap screw • 5/16 wrench	25 (51)
Piston Rod Nuts	3/8-16 UNC	316 SS hex head locknut • 5/8 wrench	20 (27)
Tie Rod Nuts	3/4-16 UNF	316 SS hex head nut • 1-1/8 wrench	60 (102)
Air Manifold Mounting Screws	10-32 UNF	SS socket head • 5/32 wrench	3.3 (4.4)
Control Valve MountingScrews	1/4-20 UNC	SS socket head • 3/16 wrench	7.9 (10.6)

3 Flow Curves

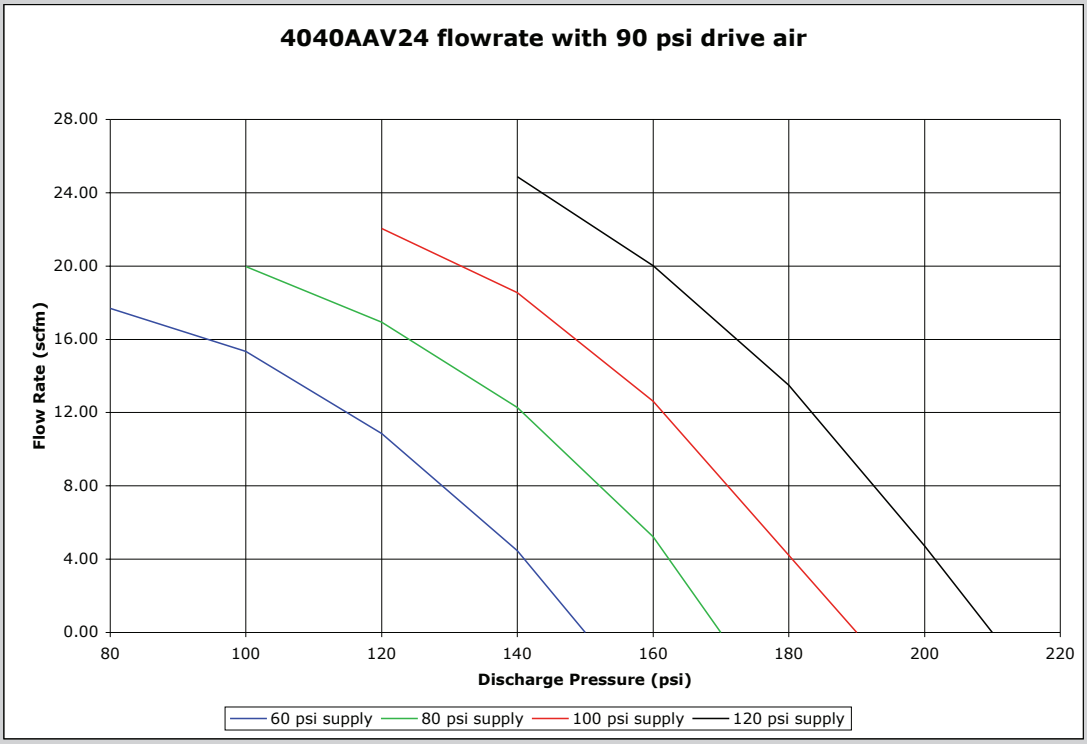

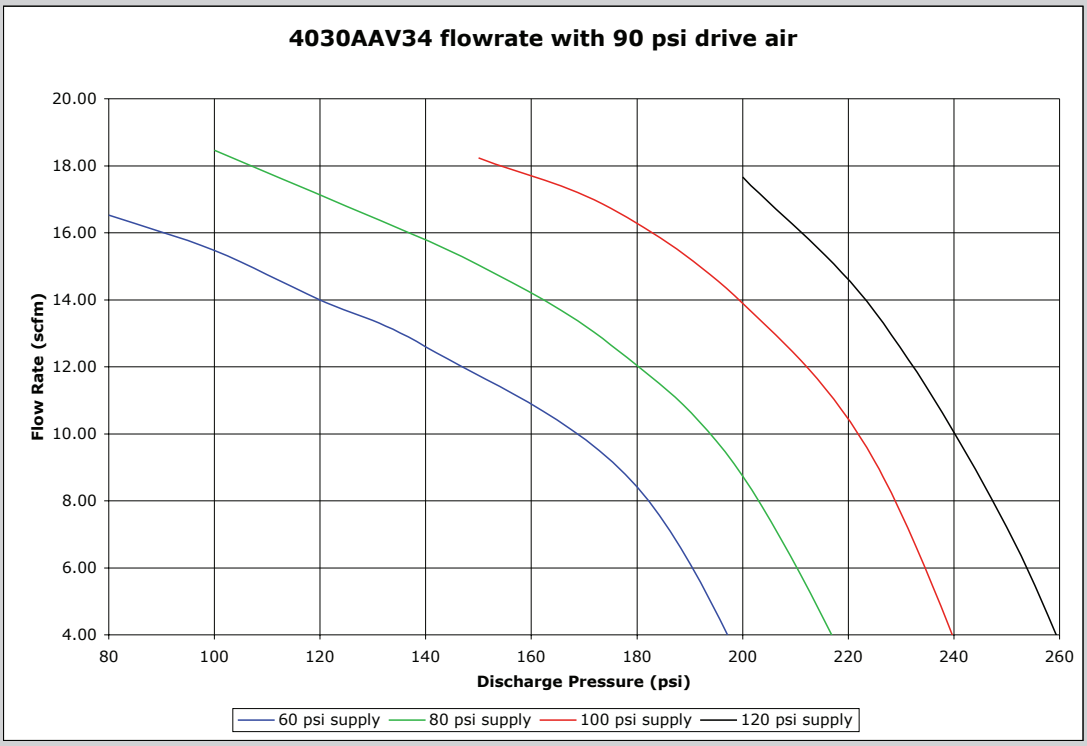

MPS
MIDWEST PRESSURE SYSTEMS

Midwest Pressure Systems, Inc.
1035 Entry Drive
Bensenville, IL 60106

Phone 630-766-6049
Fax 630-766-6236
www.midwestpressuresystems.com

3 Flow Curves

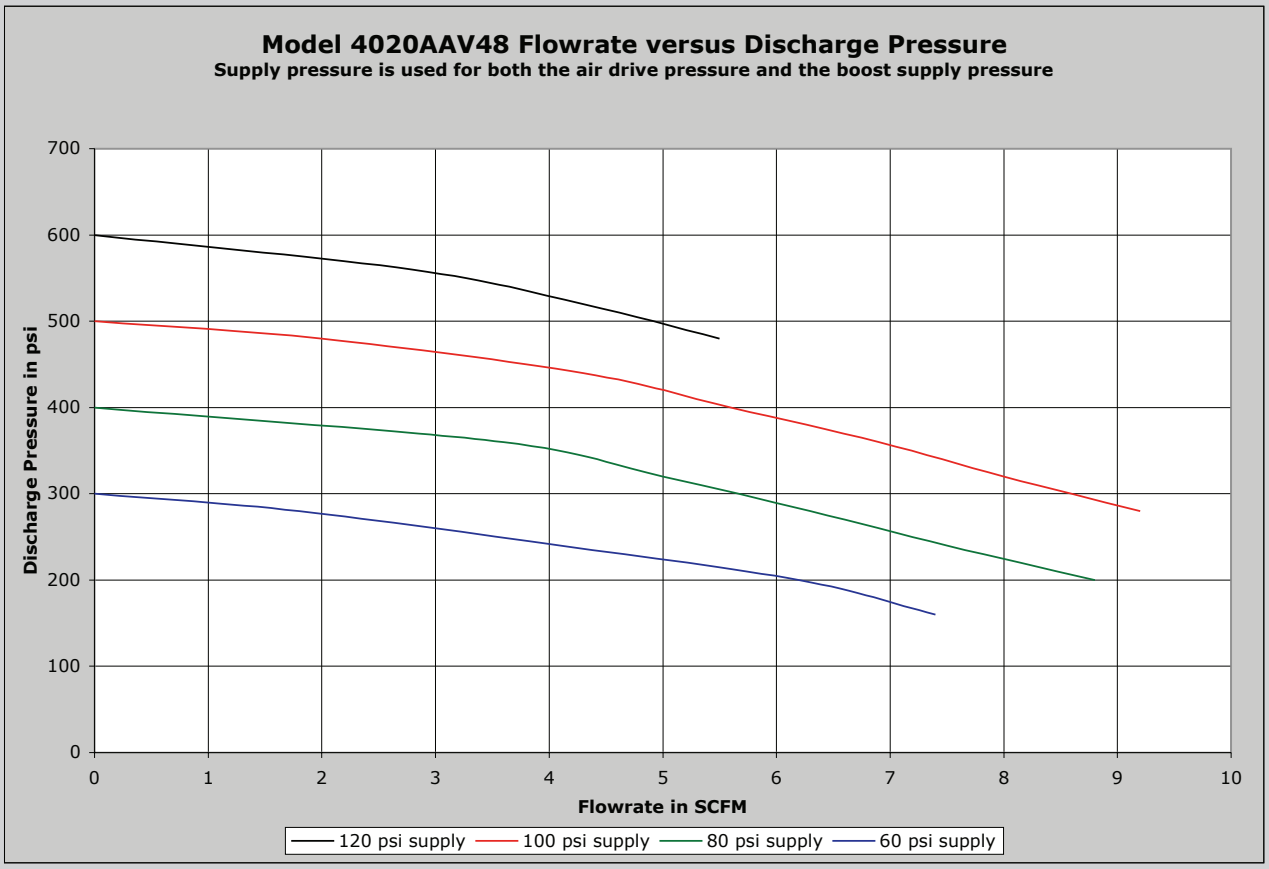

MPS
MIDWEST PRESSURE SYSTEMS

Midwest Pressure Systems, Inc.
1035 Entry Drive
Bensenville, IL 60106

Phone 630-766-6049
Fax 630-766-6236
www.midwestpressuresystems.com

4 Boost Cylinder Operation

The piston in the drive cylinder is attached to the piston in the boost cylinder. As the drive piston reciprocates, it compresses the gas in the boost cylinder. The controls which cause the drive cylinder to reciprocate are described in Section 4 entitled, "Drive Air System Operation".

The boost cylinder is double-acting, i.e., it pulls gas in on one side while pumping it out on the other. The maximum pressure boost is equal to the drive piston area divided by the boost piston area multiplied by the pressure feeding the drive cylinder. At this maximum boost pressure, the forces in the booster are balanced and the booster stalls. For example, a four inch diameter drive piston and three inch diameter boost piston with an 80 psi air supply can attain a maximum boost pressure of 142 psi. If the gas supply pressure is 1000 psi, the maximum discharge pressure would be 1142 psi and the booster would stall. When the discharge pressure drops below 1142 psi, the booster will start pumping.

Inlet check valves for chambers "A" and "B" and discharge check valves for chambers "A" and "B" are mounted inside the end cap of the boost cylinder. An internal manifold connects the two inlet check valves and an internal manifold connects the two discharge check valves. There is one inlet and one discharge gas connection. External tubing connects chamber "A" to the check valves in the end flange.

The pistons are travelling to the right and compressing the gas in chamber "B" while pulling gas into chamber "A".

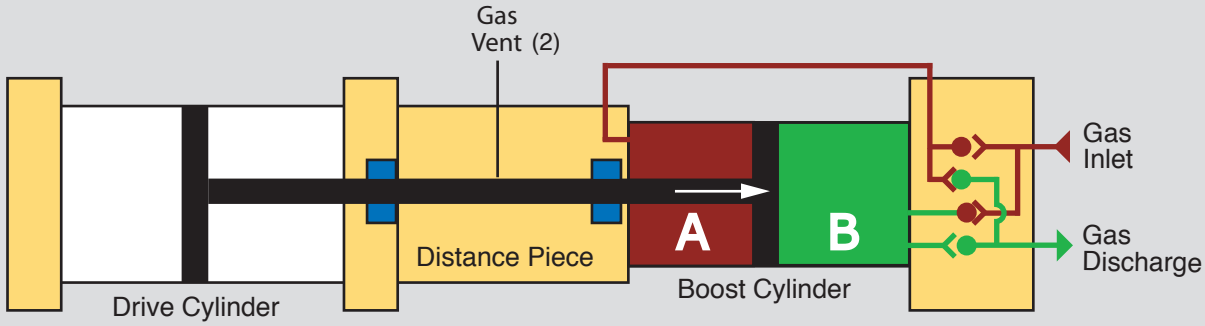

The pistons are travelling to the left and compressing the gas in chamber "A" while pulling gas into chamber "B".

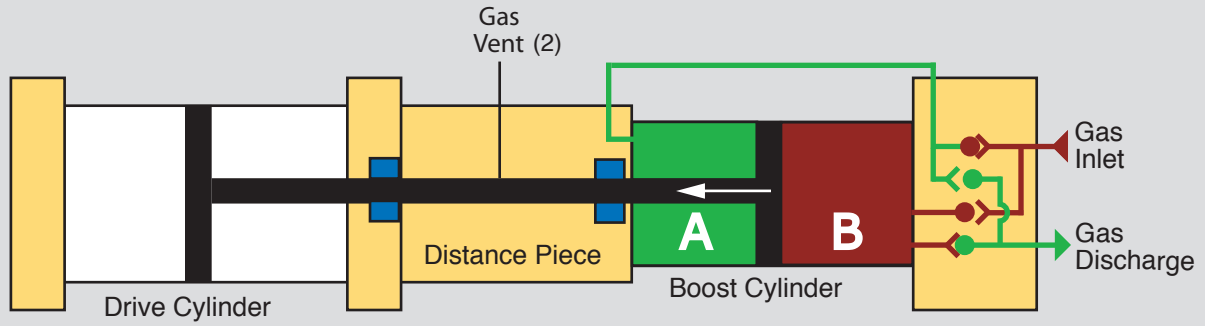

The distance piece is designed to ensure that the gas in the boost cylinder is isolated from the air in the drive cylinder. There are piston rod seals at each end of the distance piece, and the distance between the rod seals is greater than the stroke length of the booster. Consequently, the section of piston rod which penetrates the drive cylinder never penetrates the boost cylinder and vice versa.

There are two gas vent ports. Any air which leaks past the air side rod seal, or gas which leaks past the gas side rod seal will flow out of these vents. The unit is supplied with breathers which vent to atmosphere. If the boosted gas is hazardous, connect one vent port to a flare or vent system and plug the other port. Both vent ports can be used if a nitrogen purge system is desired.

5 Drive Air System Operation

The sketch below shows the 4-way valve extended to the left. This causes drive air to fill drive cylinder chamber "B" and opens chamber "A" to exhaust. The air piston is driven to the left. The drive air supply also feeds pilot valve "A" and pilot valve "B". Both of these valves are closed, and the pilot ports at the end of the 4-way valve are open to atmosphere through breather vent "A" and breather vent "B". All of the piping connections shown in the sketch are machined into in the valve manifold and cylinder end caps. There is no external tubing.

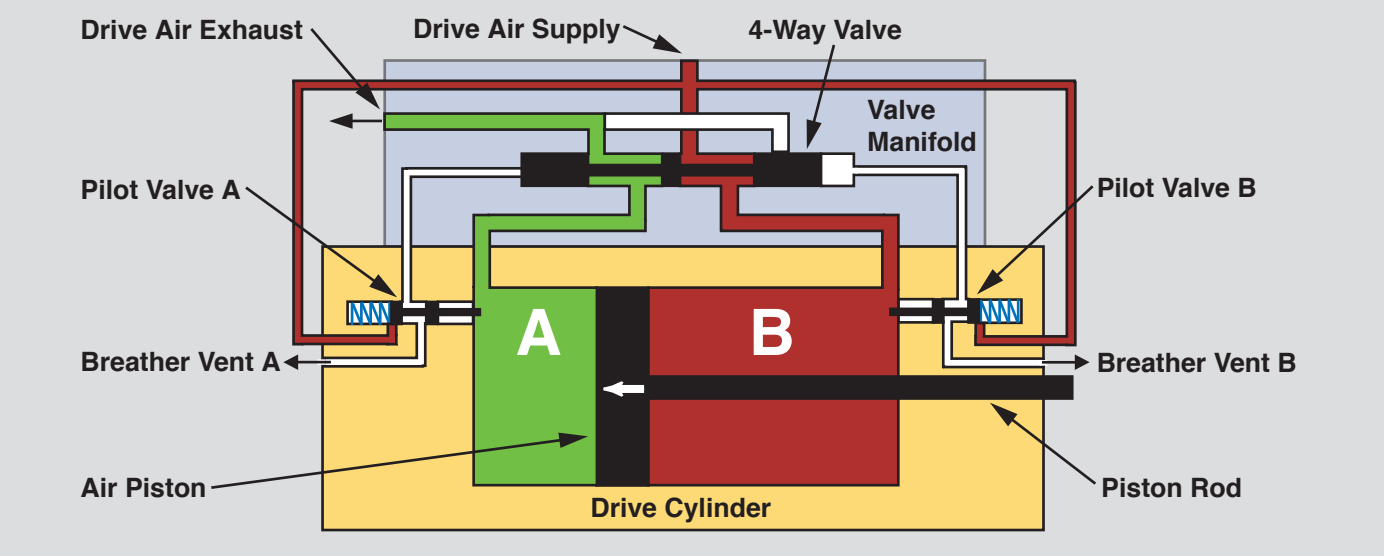

In the sketch below, the air piston has reached the end of its stroke and opened pilot valve "A". This closes breather vent "A" and sends pilot air to the left pilot port on the 4-way valve. The 4-way valve shifts to the right, opens chamber "B" to exhaust and supplies drive air to chamber "A". The air piston moves to the right. When the piston moves off the end cap a spring returns pilot valve "A" to its normal position which closes off the air supply and vents the pilot air from the 4 way valve. This process is repeated on the right end of the drive cylinder which causes the air piston to reciprocate automatically.

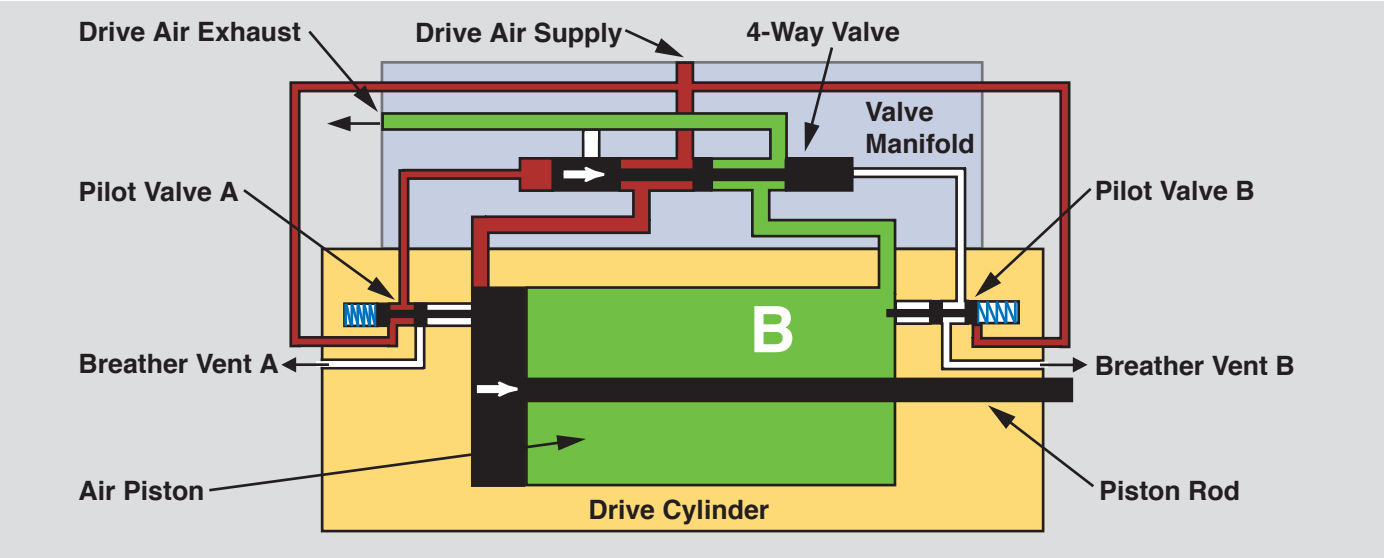

MPS
MIDWEST PRESSURE SYSTEMS

Midwest Pressure Systems, Inc.
1035 Entry Drive
Bensenville, IL 60106

Phone 630-766-6049
Fax 630-766-6236
www.midwestpressuresystems.com

6 Installation, Startup, Operation, Maintenance & Warranty

Installation

1 The booster has mounting brackets on each end with two 13/32 inch diameter mounting holes centered on the corners of a 2 inch by 21.5 inch rectangle. The booster can be mounted in any orientation using 3/8 inch diameter mounting bolts.

2 The drive air line connection is 3/8 female NPT. The booster drive air should be ISO 8573.1 CLASS 2 or better to reduce the possibility of ice formation in the valve. If ambient temperatures fall below freezing, the air supply line should be heated. A drive air filter with a 5 micron or better rating should be installed to prevent particulates from entering the booster. A pressure regulator and pressure gauge should be installed to enable control of the drive air pressure which determines the boost pressure. A shutoff valve should be included to isolate the booster from the drive air supply for maintenance.

3 The process gas inlet and discharge connections are 1/2 inch female NPT. The gas inlet should include a filter with a 5 micron or better pressure rating. The booster seals produce fine dust particles, consequently the discharge line should also have a 5 micron filter to protect downstream components. Installation of a pulsation dampener on the discharge line will reduce the amplitude of the pressure pulsations generated by the booster.

4 The Teflon booster rod seals are not bubble tight although leakage rates are very low.There are two 1/4 inch female NPT vent ports on the distance piece with installed breathers. If the boosted gas is hazardous, one of these ports should be plugged, and the other port connected to a safety vent system. If a nitrogen purge system is desired, one port can be used as the supply port and the other port as the discharge port.

Startup

1 Check the label on the booster and make sure that the maximum allowable working pressure ratings of the booster will not be exceeded. Supply process gas to the booster. The gas should flow through the inlet check valves, boost cylinder and discharge check valves. If it does not, check to make sure the supply and discharge lines are connected to the correct ports. Check the process gas wetted components for leaks.

2 Supply drive air to the booster. The booster will begin to cycle. If the process gas discharge line is closed, the booster will pressurize the discharge line to the maximum boost pressure described in the “Boost Cylinder Operation” section of this manual and stop cycling. If there is discharge flow, the booster will automatically cycle as fast or slow as necessary to meet the required flowrate, as long as the flow requirement is within the operating envelope of the booster. While the booster is cycling, check the drive air wetted components for leaks.

Operation

1 The booster will reciprocate as long as drive air is supplied and process gas flow is required. The booster cycle rate will automatically adjust to meet the required flowrate.

2 The operating life of the booster seals is a function of the distance the seals travel. At a 70 cycle per minute operating speed, the booster seals should provide over 2000 hours of service.

3 The leakage rate from the rod seals is lower than 0.1 scfh when they are new. This rate can climb to 20 scfh for well-worn rod seals.

Maintenance

1 All of the booster dynamic seals are carbon fiber filled Teflon and the control valve dynamic components are made from honed and lapped stainless steel with no elastomeric seals. No lubrication of any kind is required for the booster.

2 The booster air and gas supply filters should be checked periodically.

Warranty

Midwest Pressure Systems, Inc. warrants these boosters to be free of defects in material and workmanship for a period of one year after installation. We will either repair or replace a failed unit returned by the customer. No other warranty is expressed or implied. Proof of the installation date is required. This warranty does not apply to equipment which has been abused, and is voided by failure to use a well-maintained inlet filter.

The boosters can be operated in a manner where the seals will wear out before a year has passed. This warranty does not cover replacement of wear parts unless they are defective.

MPS
MIDWEST PRESSURE SYSTEMS

Midwest Pressure Systems, Inc.
1035 Entry Drive
Bensenville, IL 60106

Phone 630-766-6049
Fax 630-766-6236
www.midwestpressuresystems.com